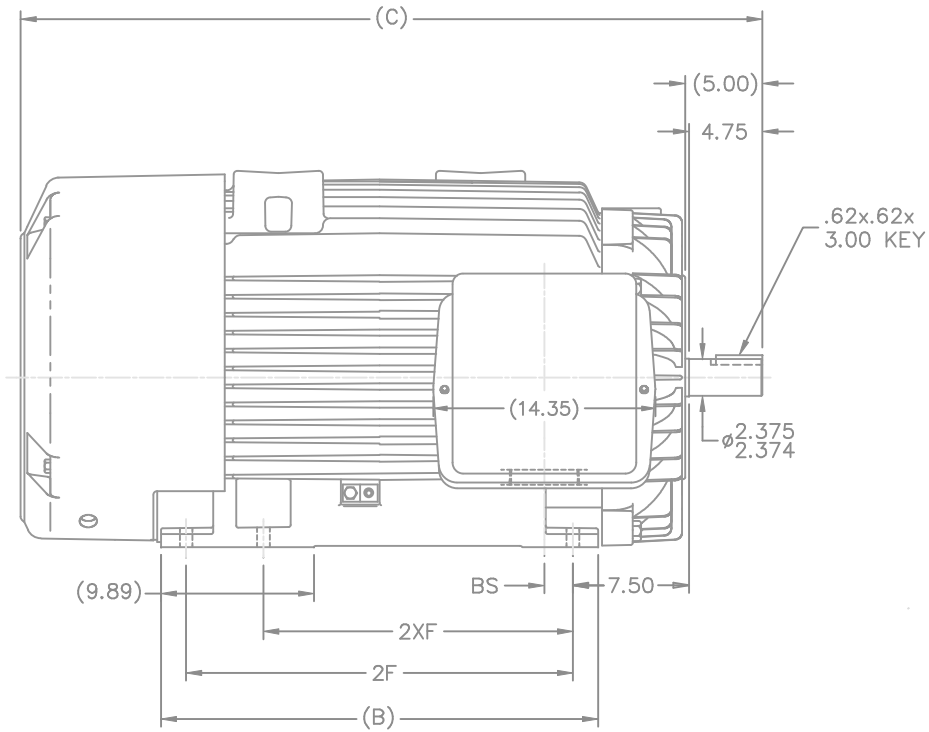

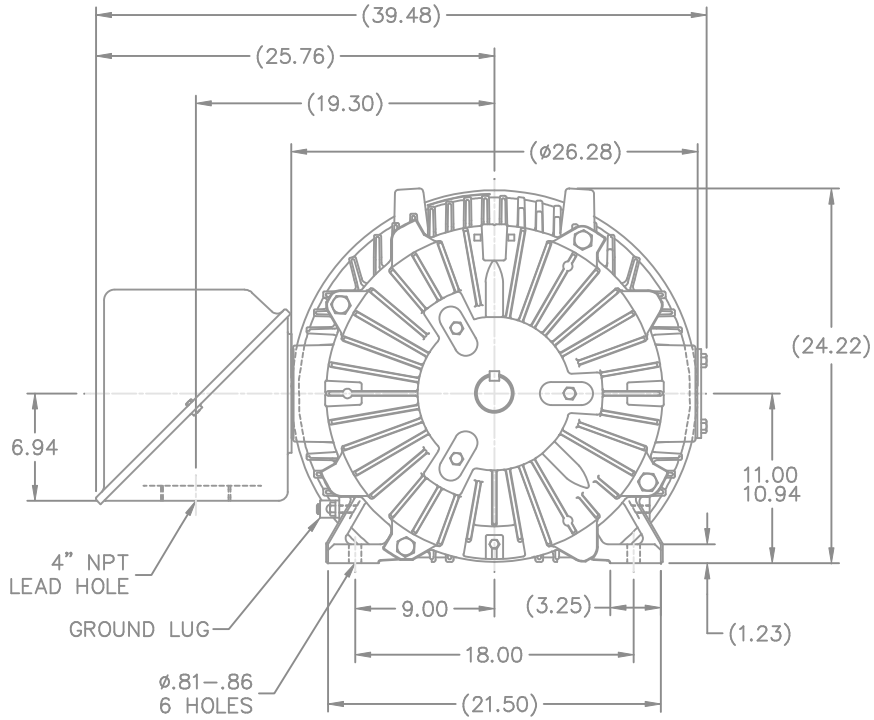

NOTES:
1. CONDUIT BOX CAN BE ROTATED IN 90° STEPS.
2. NAMEPLATES TO BE READ FROM CONDUIT BOX SIDE OF MOTOR

(B–SS515689)

DASH	FRAME	B	C	2F	2XF	BS
2875	447TS	28.25	47.88		20.00	1.78
2875	449TS	28.25	47.88	25.00		1.78

NO.	REVISION	BY & DATE	CHK
1	NEW DRAWING MU45199	KL 01-24-2003	

TOLERANCES UNLESS SPECIFIED

DEC.	INCHES
.X	±.1
.XX	±.03
.XXX	±.005
.XXXX	±.0005
ANG	±7'30"

MARATHON ELECTRIC

TITLE OUTLINE – TAPPED LEAD HOLE
447/449TS FR. – TEFC – GRD. LUG

MAT'L.
FINISH
RFP
DIST WA
CAD FILE ss519568

DRAWN KL 01-23-2003
CHK GFH 01-24-2003
APPD JES 01-24-2003
SCALE 1=8
REF
FMF
PREV

SIZE B | DRAWING NO. SS519568 | PAGE OF | REV. 1

THIS DRAWING IN DESIGN AND DETAIL IS OUR PROPERTY AND MUST NOT BE USED EXCEPT IN CONNECTION WITH OUR WORK ALL RIGHTS OF DESIGN AND INVENTION ARE RESERVED
THIS IS AN ELECTRONICALLY GENERATED DOCUMENT – DO NOT SCALE THIS PRINT