37LYN046

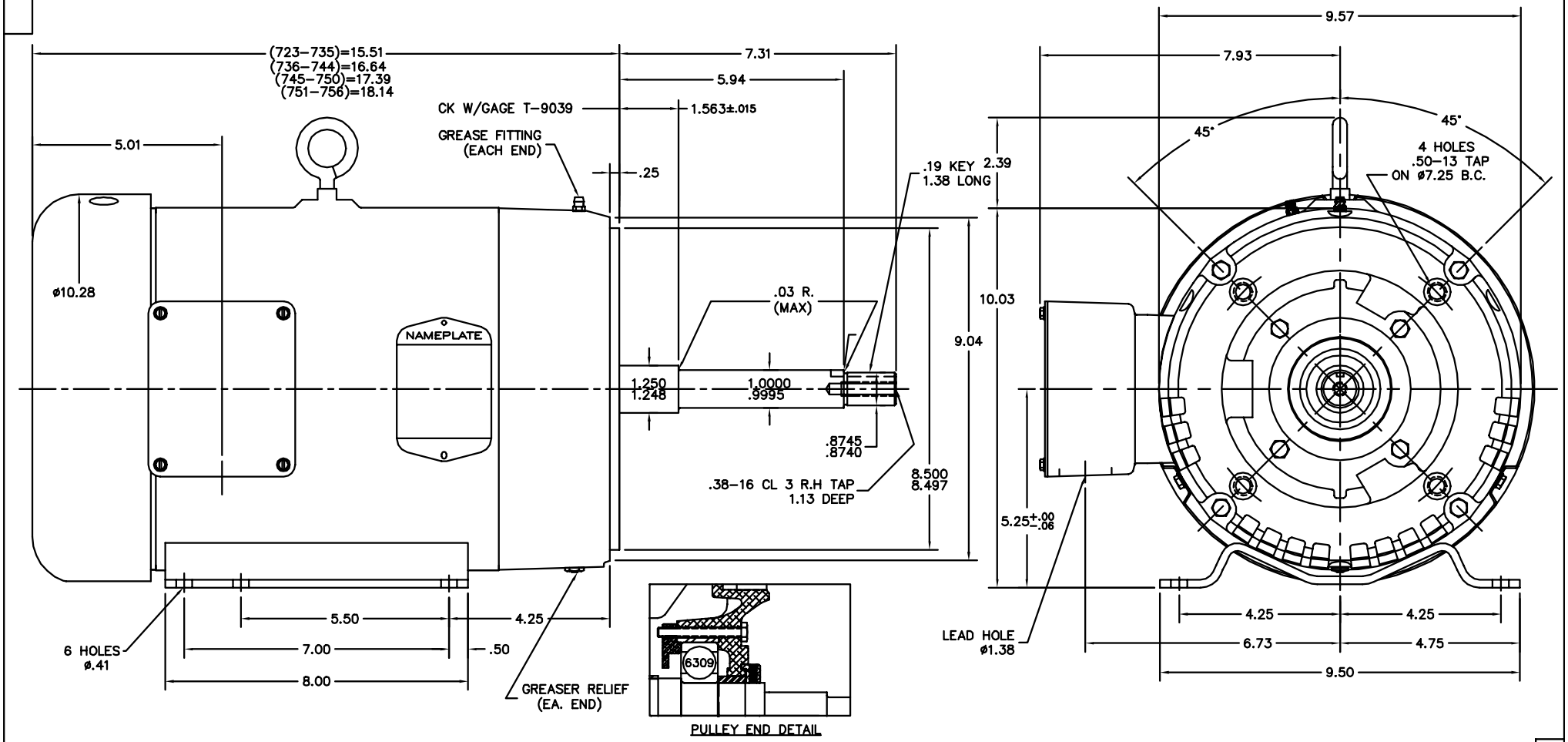

CUSTOMER IS RESPONSIBLE FOR DETERMINING THAT MOTOR PERFORMANCE IS SUITABLE IN THE APPLICATION.

REV. DESC: ADDED KOBX LEAD HOLE DIM			
REV. LTR: N	BY: RMP	REVISED: 10:13:05 09/10/2004	TDR: 342869
FILE: AAA00017612			REF: 37LYN046
MTL: –			

BALDOR ELECTRIC Co.

HORZ 213–5TCZ TEFC 37M WEST COAST PUMP MTG.

37LYN046