Uncontrolled Copy

SS74126

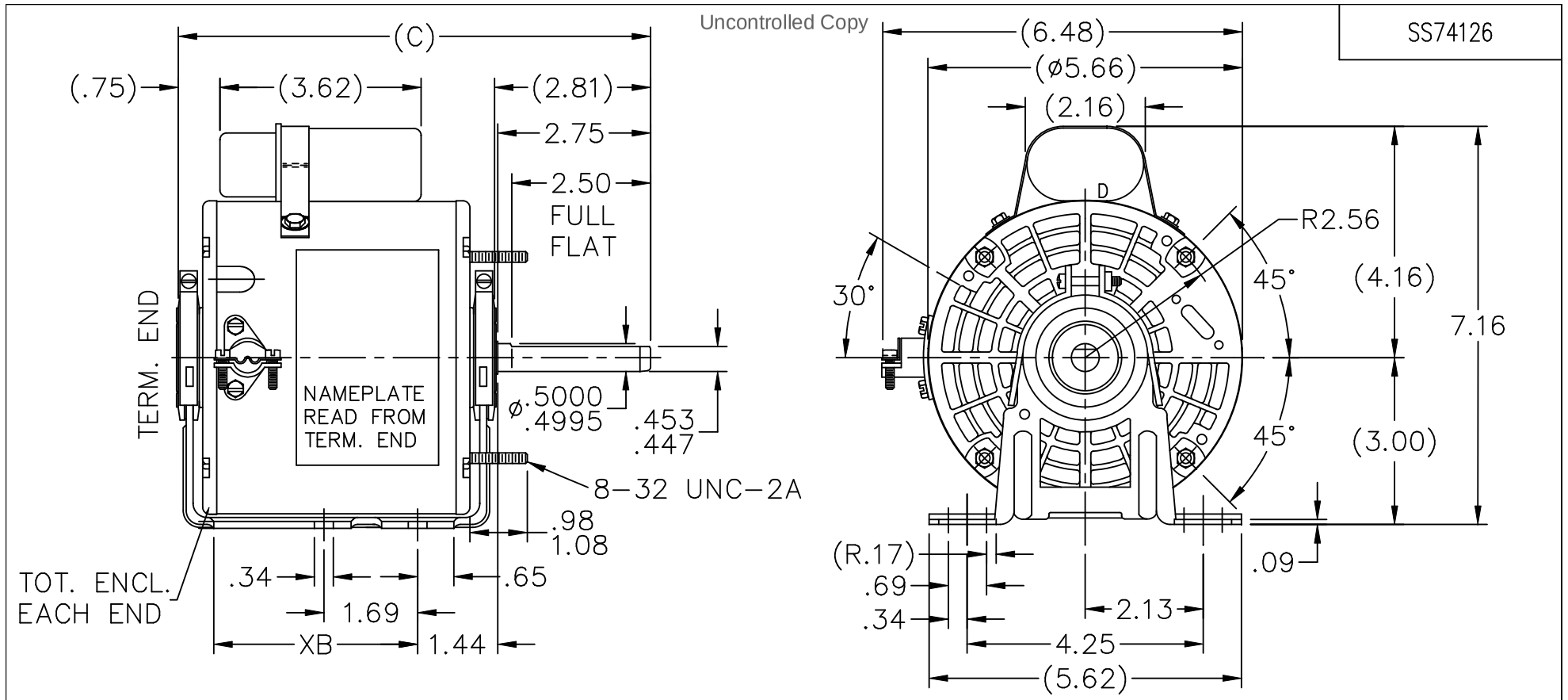

LEAD DESCRIPTION:
1 BLACK AND 1 WHITE LEAD WITH .50 BARE WIRE STRIP EXIT MOTOR THROUGH CONDUIT CONNECTOR WITH ADJUSTABLE THROAT OPENING. 35.00–37.00" LONG PURPLE AND YELLOW REVERSING LEADS MOLDED INTO MATING PULL–APART PLUGS. 4.00–6.00 LONG.

DASH	C	XB
425	8.50	3.67
475	9.00	4.17

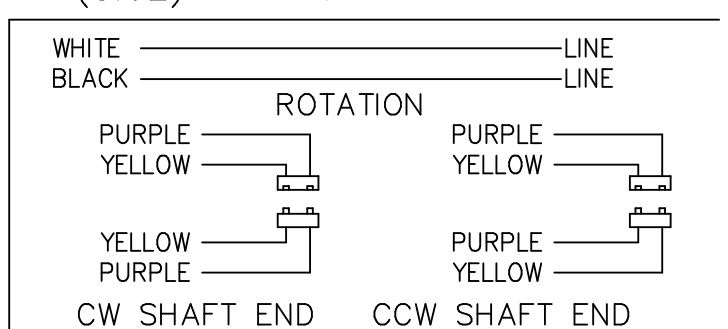

NO.	REVISION	BY & DATE	CHK
4	REVISED MOUNTING HOLE LOCATIONS	RJW 07–12–2005	ML
3	REDRAWN IN AUTOCAD	TAT 05–19–2005	ML
2	REDRAWN ON CADD – NO CHANGE	MRB 04–01–1998	

TOLERANCES UNLESS SPECIFIED

	DEC.	INCHES
	.X	±.1
	.XX	±.03
	.XXX	±.005
	.XXXX	±.0005
ANG		±7'30"

MARATHON ELECTRIC

TITLE OUTLINE

MAT'L.

FINISH

CAD FILE ss74126

RFP

DIST WP

DRAWN MRB 03–10–1998
CHK ML 04–01–1998
APPD GK 04–01–1998
SCALE 3=8
REF
FMF
PREV

SIZE	DRAWING NO.	PAGE OF	REV.
A	SS74126		4

THIS DRAWING IN DESIGN AND DETAIL IS OUR PROPERTY AND MUST NOT BE USED EXCEPT IN CONNECTION WITH OUR WORK ALL RIGHTS OF DESIGN AND INVENTION ARE RESERVED
THIS IS AN ELECTRONICALLY GENERATED DOCUMENT – DO NOT SCALE THIS PRINT

7/26/2007 2:23:28 PM -

9513130

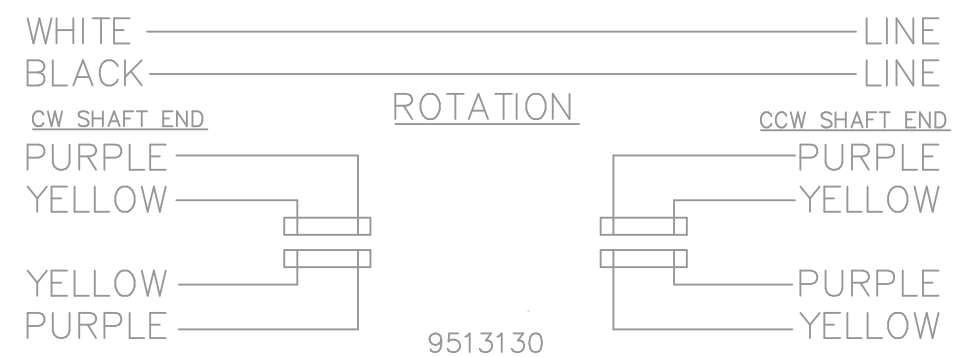

				TOLERANCES UNLESS SPECIFIED		REGAL-BELOIT Motor Technologies Group	DRAWN TOM 09/19/1988
				DEC.	INCHES		CHK
				.X	±.1		APPD MS 09/20/1988
				.XX	±.02	TITLE CONNETION DIAGRAM	SCALE 1=1
3	REDRAWN IN AUTOCAD	JMS 03/11/2005		.XXX	±.005		REF
2	NEW DRAWING	TOM 09/19/1988		.XXXX	±.0005	MAT'L.	FMF
NO.	REVISION	BY & DATE	CHK	ANG	±7'30"	FINISH	PREV

THIS DRAWING IN DESIGN AND DETAIL IS OUR PROPERTY AND MUST NOT BE USED EXCEPT IN CONNECTION WITH OUR WORK ALL RIGHTS OF DESIGN AND INVENTION ARE RESERVED
THIS IS AN ELECTRONICALLY GENERATED DOCUMENT – DO NOT SCALE THIS PRINT

RFP	CAD FILE 9513130	SIZE	DRAWING NO. PAGE OF	REV.
DIST WP		A	9513130	3

9/29/2008 10:45:52 PM