SS200218

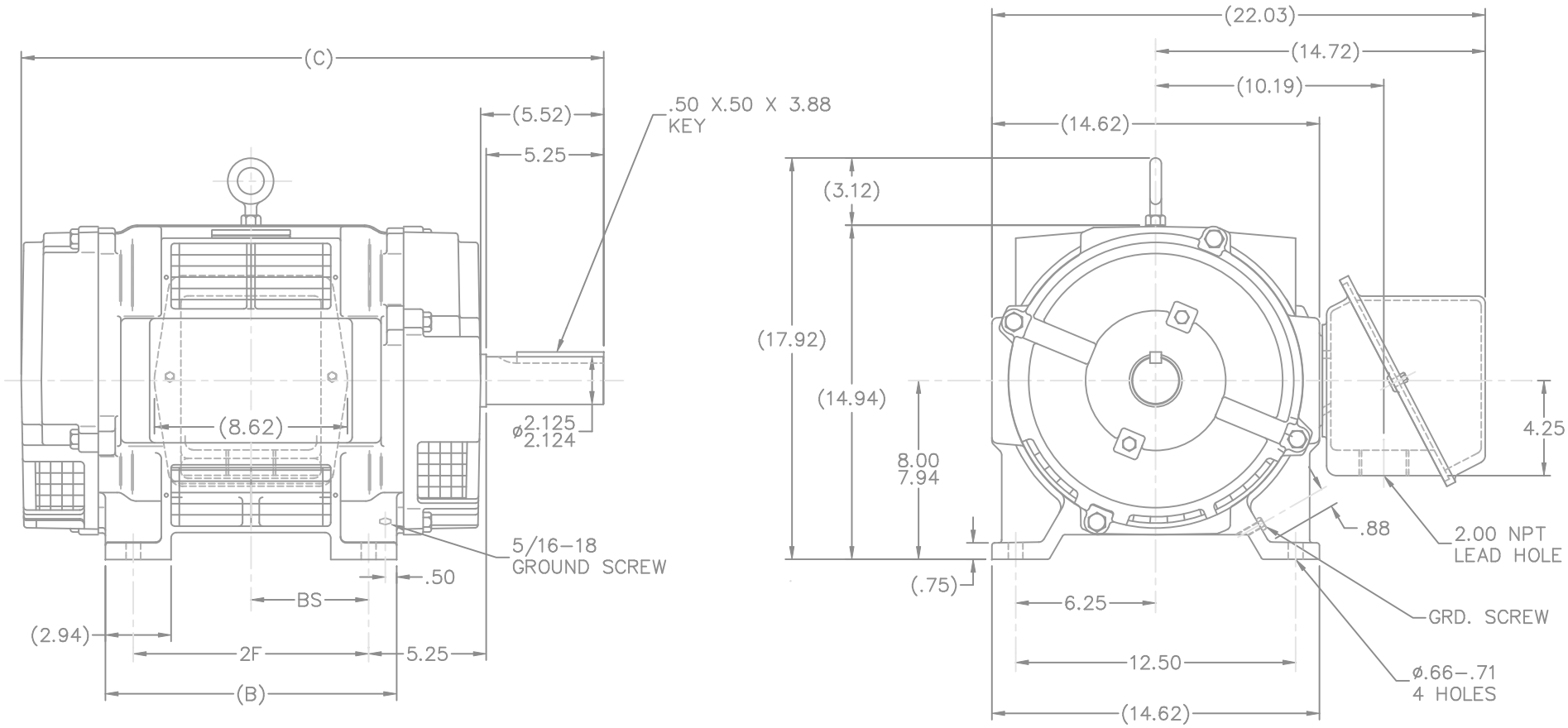

NOTES:
1. BOX CAN BE ROTATED IN 90° STEPS
2. BOX CAN BE MOUNTED F1 ON OPPOSITE SIDE BY REMOVING BRACKETS AND TURNING FRAME 180°
3. NAMEPLATE TO BE READ FROM CONDUIT BOX SIDE OF MOTOR

DASH	FRAME	B	C	2F	BS
1362	324T	13.00	26.00	10.50	5.25
1512	326T	14.50	27.50	12.00	6.00

(SS200150)

NO.	REVISION	BY & DATE	CHK
6	REDRAWN IN AUTOCAD	TAT 06-13-2005	ML
5	UPDATED C'BOX GEOMETRY CN 28424	DRS 01-06-2000	
4	UPDATED SHAFT HEIGHT CN 16763	DRS 09-27-1996	
3	REVISED TO F2 MOUNTING	DA 09-22-1992	

TOLERANCES UNLESS SPECIFIED

DEC.	INCHES
.X	±.1
.XX	±.03
.XXX	±.005
.XXXX	±.0005
ANG	±7'30"

MARATHON ELECTRIC

TITLE OUTLINE–DR.PR.–CAST IRON C' BOX THD'D 320 FR.–D.E.V.–SCREENED–GROUND SCREW

MAT'L.

FINISH

CAD FILE ss200218

RFP

DIST WA

DRAWN	JL 07-30-1990
CHK	ML 07-30-1990
APPD	GK 07-30-1990
SCALE	7=32
REF	
FMF	
PREV	

SIZE	DRAWING NO.	PAGE OF	REV.
B	SS200218		6

THIS DRAWING IN DESIGN AND DETAIL IS OUR PROPERTY AND MUST NOT BE USED EXCEPT IN CONNECTION WITH OUR WORK ALL RIGHTS OF DESIGN AND INVENTION ARE RESERVED
THIS IS AN ELECTRONICALLY GENERATED DOCUMENT – DO NOT SCALE THIS PRINT