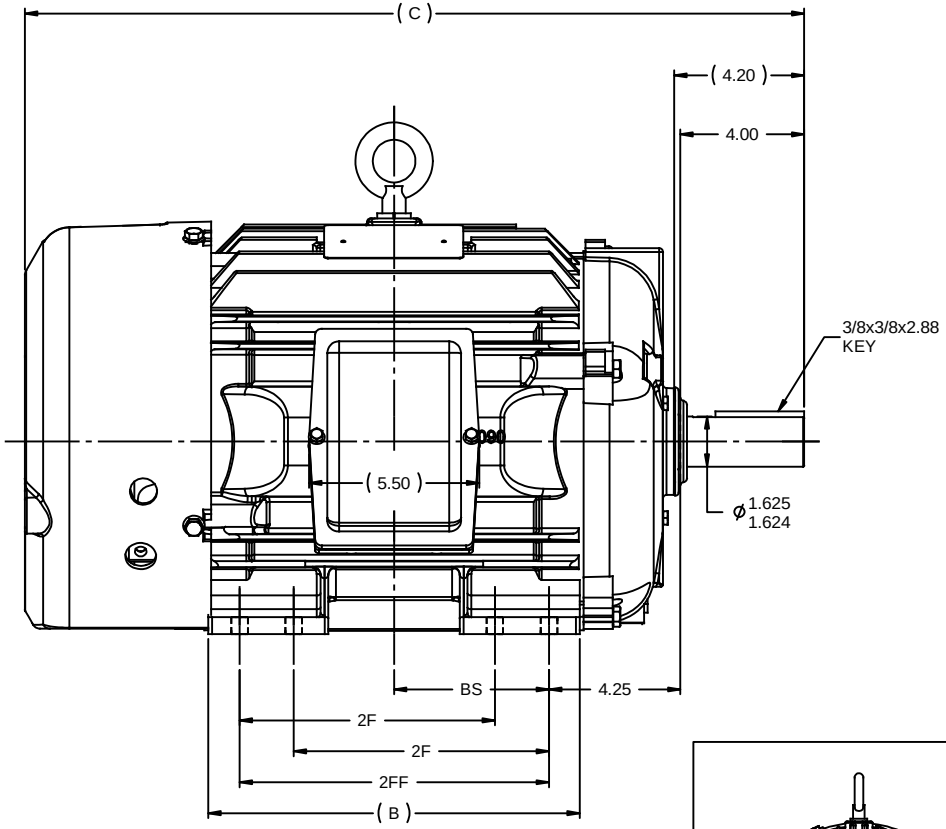

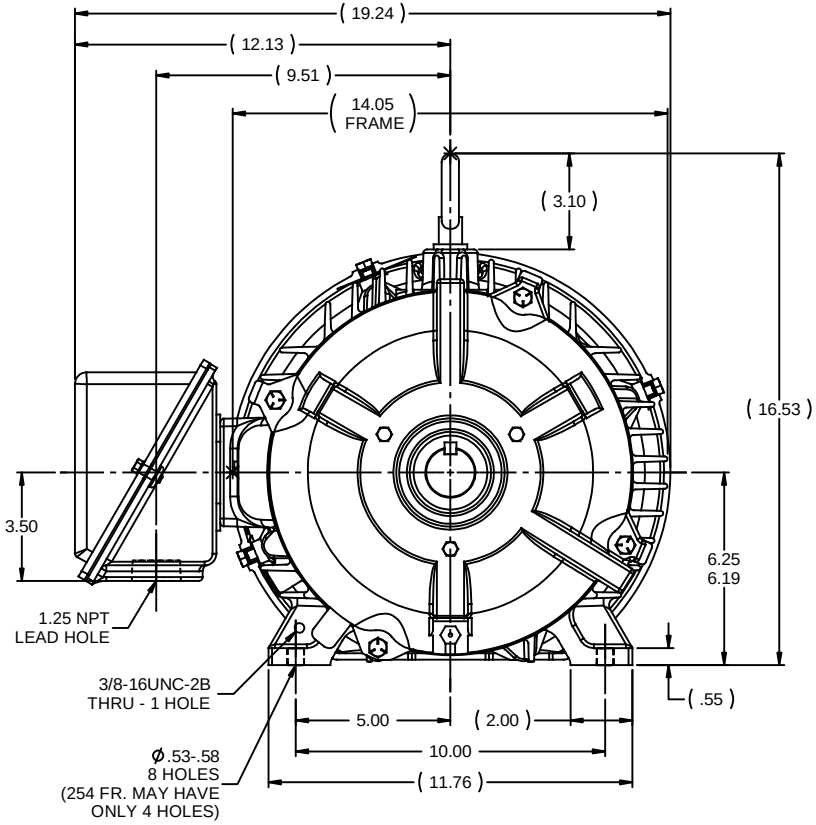

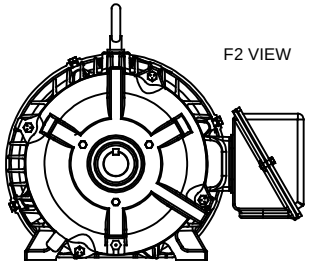

NOTES:
1. CONDUIT BOX CAN BE ROTATED ON ITS AXIS.
2. CONDUIT BOX CAN BE MOUNTED ON OPPOSITE SIDE BY REMOVING BRACKETS AND TURNING FRAME 180°.
3. NAMEPLATE TO BE READ FROM CONDUIT BOX SIDE OF MOTOR.

DASH	FRAME	C	B	2F	2FF	BS
1050	254T	23.43	10.25	---	8.25	4.12
1225	256T	25.18	12.00	8.25	10.00	5.00

NO	REVISION	BY & DATE	CHK
8	UPDATED TO NEW FRAME DESIGN WITH EYEBOLT.		
8	REDUCED 'C' DIMENSION BY .09 MU101337	MSG 3/21/2011	MJS
7	REMOVED DRAIN HOLE 08-3074	RJW 07-06-2008	ML
6	ADDED 'F2' VIEW MU85891	RJW 05-22-2008	ML
5	REDRAWN IN AUTOCAD - NO CHANGES	TAT 06-29-2004	ML
4	REMOVED NOTE ABOUT IEEE-841 CN 2400-916	MJD 09-30-1997	

TOLERANCES UNLESS SPECIFIED

DEC	INCHES
.X	±.1
.XX	±.03
.XXX	±.005
.XXXX	±.0005
ANG	±7'30"

marathon electric

TITLE OUTLINE - TEFC
250T FR. - BB - TS - STD.

MAT'L
FINISH
PREV

DRAWN KL 01-13-1994
CHK ML 01-14-1994
APPR JL 01-17-1994
SCALE 1:4
REF
FMF
PAGE OF

THIRD ANGLE PROJECTION

RFP 01-17-1994
NETWORK FILE NAME SS203002

SIZE B
DRAWING NO SS203002
REV 8

4/14/2011 11:44:10 AM