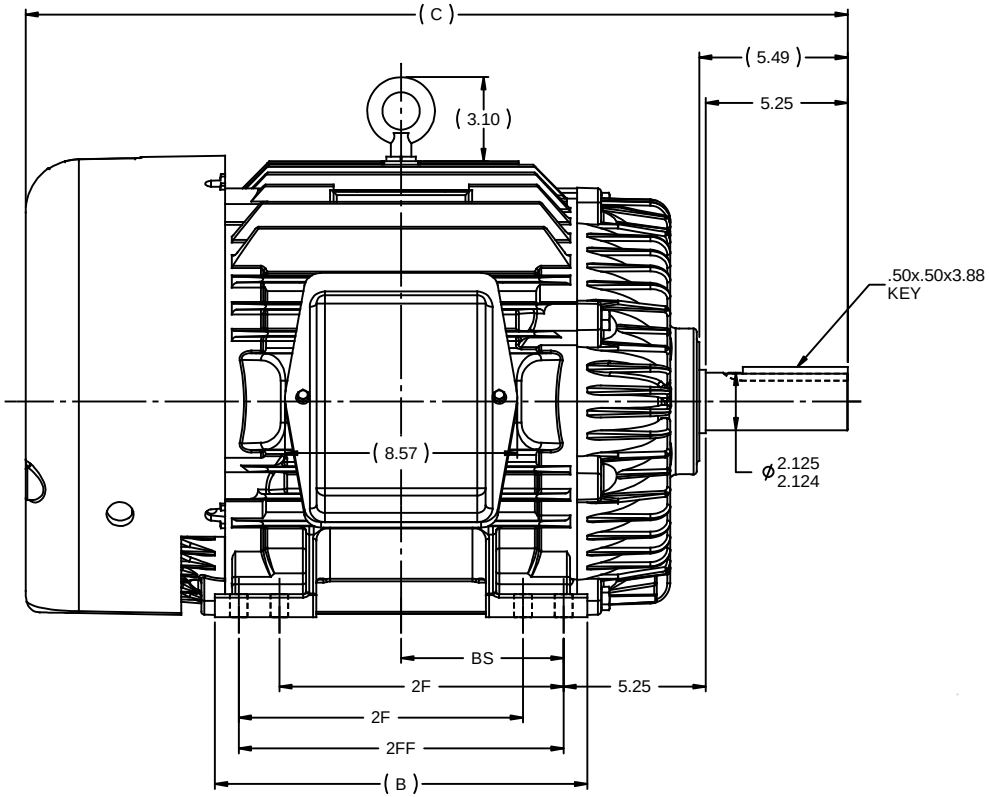

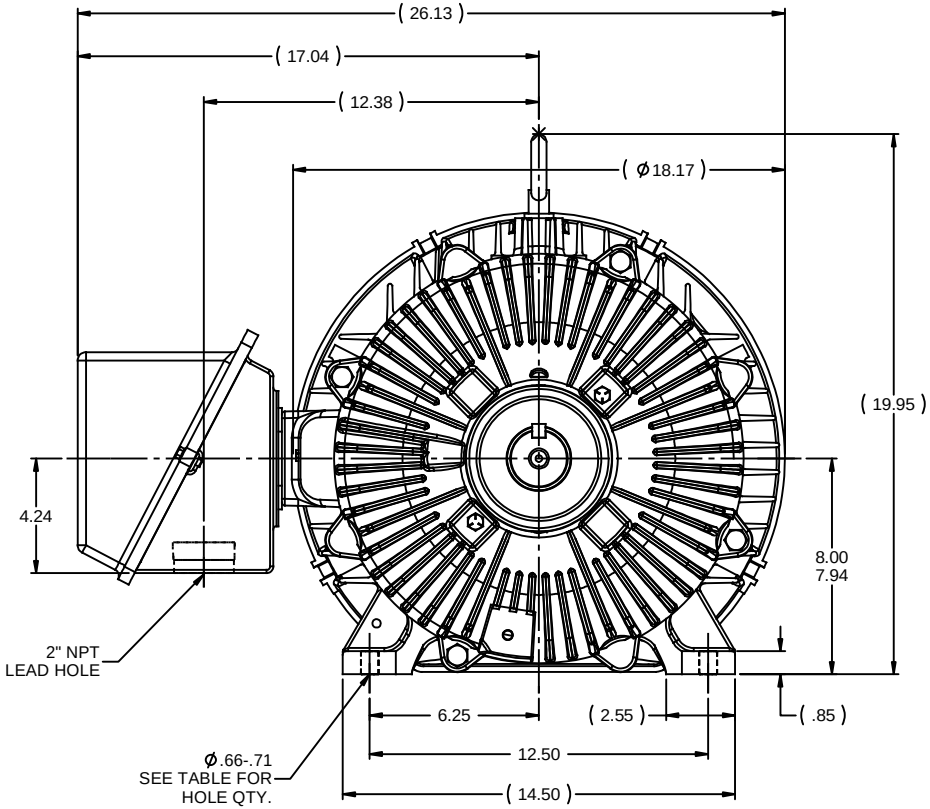

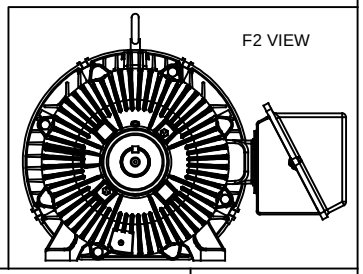

NOTES:
1. CONDUIT BOX CAN BE ROTATED IN 90° STEPS.
2. CONDUIT BOX CAN BE MOUNTED ON OPPOSITE SIDE BY REMOVING BRACKETS AND TURNING FRAME 180°
3. NAMEPLATES TO BE READ FROM CONDUIT BOX SIDE OF MOTOR.

DASH	FRAME	B	C	BS	2F	2FF	FOOT HOLE QTY
1150	324T	13.00	28.88	5.25	-	10.50	4
1300	324/6T	14.50	30.38	6.00	10.50	12.00	8
1450	326T	15.00	31.88	6.75	12.00	13.50	8

NO	REVISION	BY & DATE	CHK
16	ADDED F2 VIEW	TJW 3/23/2011	CTO
15	REVISED 2F & 2FF DIMENSIONS CN32785	TAT 7/27/2004/	ML
14	CHANGED 2F DIMENSION FOR -1450 CN33505	TAT 3/31/2004	ML
13	ADDED FOOT HOLE QTY & MTG. TO TABLE CN37323	TAT	
12	REMOVED DASH 1450 MU31041	MJD 5/24/2000	
11	UPDATED C'BOX GEOMETRY CN28424	DRS 2/11/2000	

TOLERANCES UNLESS SPECIFIED

DEC	INCHES
.X	±.1
.XX	±.03
.XXX	±.005
.XXXX	±.0005
ANG	±7'30"

marathon electric

TITLE OUTLINE
320T FR. - BB - TS - TEFC

MAT'L
FINISH

DRAWN RM 1/12/1993
CHK ML 1/12/1993
APPR GK 1/12/1993
SCALE 7:32
REF
FMF
PAGE OF

THIRD ANGLE PROJECTION

RFP
PREV
NETWORK FILE NAME SS28703

SIZE B
DRAWING NO SS28703
REV 16

3/23/2011 10:32:38 AM