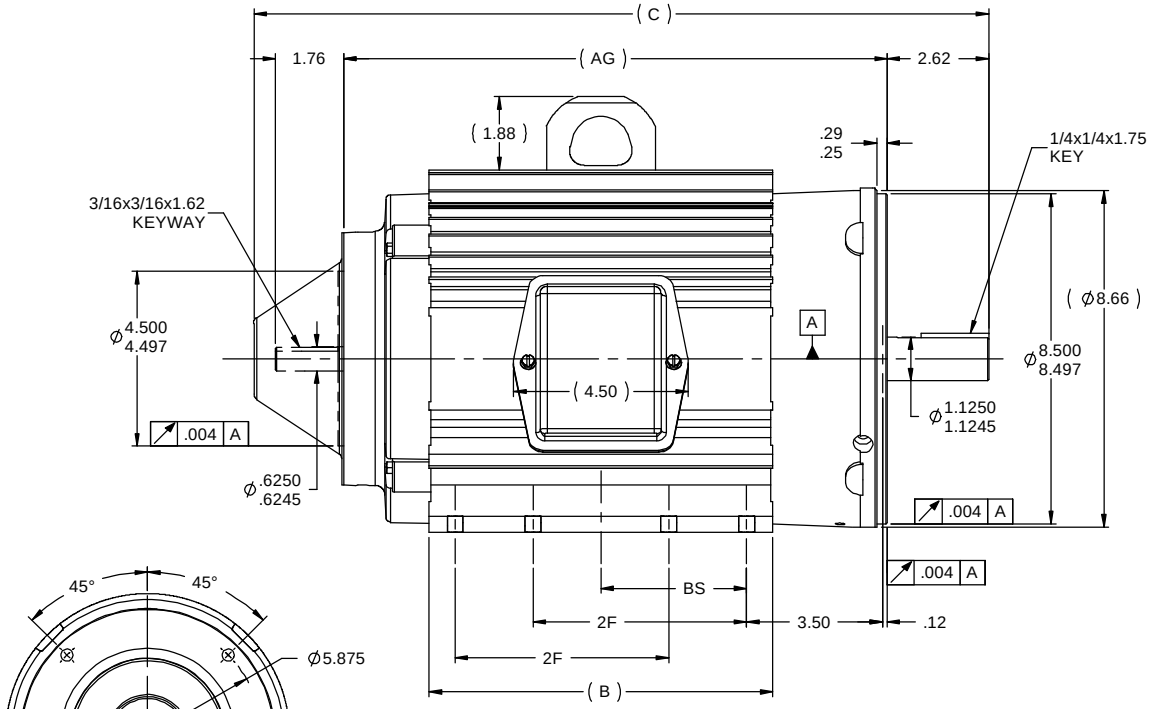

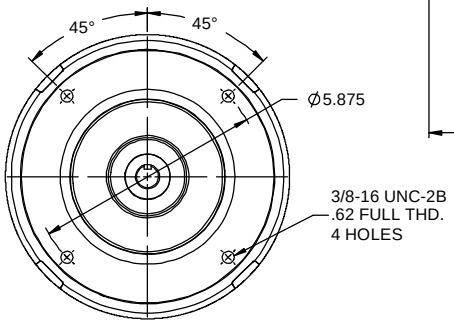

FRONT BRACKET DETAIL
(COVER REMOVED)

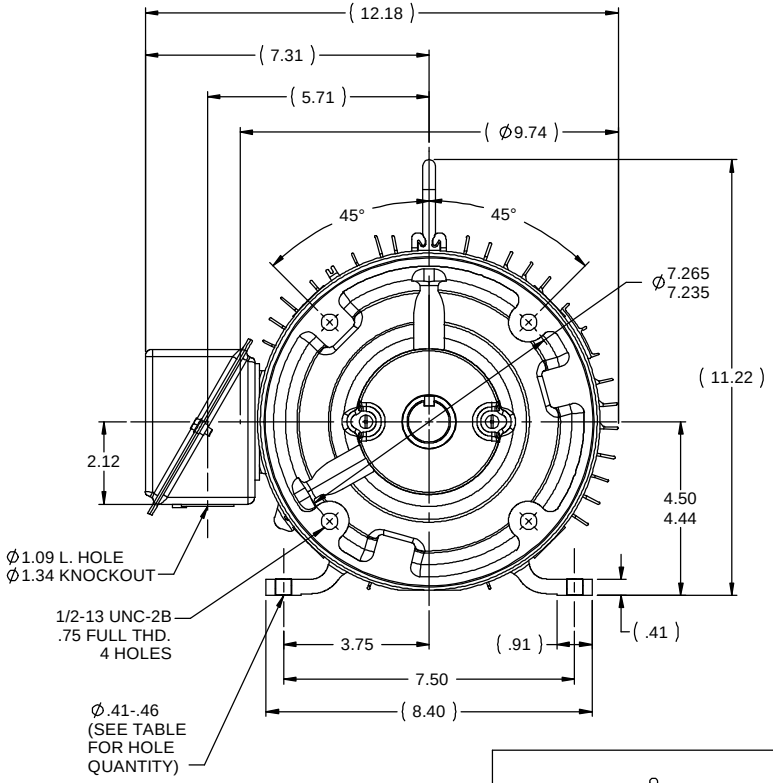

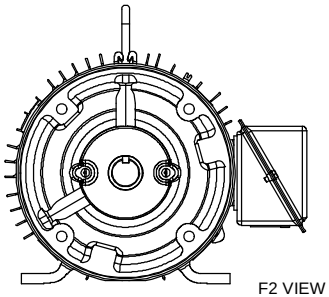

F2 VIEW

NOTES:
1- C'BOX CAN BE ROTATED IN 90° STEPS.
2- C'BOX CAN BE MOUNTED ON OPPOSITE SIDE BY REMOVING BRACKETS AND TURNING FRAME 180°.
3- NAMEPLATE TO BE READ FROM C'BOX SIDE OF MOTOR.

DASH	FRAME	C	AG	B	2F	BS	FOOT HOLES	MTG.
575	182TC	15.93	11.00	5.85	4.50	2.25	8	F1 OR F2
675	182TC	16.93	12.00	6.85	4.50	2.75	8	F1 OR F2
675A	184TC	16.93	12.00	6.85	5.50	2.75	4	F1 OR F2
720	182TC	17.38	12.45	7.30	4.50	2.98	8	F1 OR F2
720	182TC	17.38	12.45	7.30	4.50	2.98	4	F1 ONLY
775	184TC	17.93	13.00	7.85	5.50	3.25	8	F1 OR F2
875	182TC	18.93	14.00	8.85	4.50	3.75	8	F1 OR F2
875	184TC	18.93	14.00	8.85	5.50	3.75	8	F1 OR F2
925	184TC	19.43	14.50	9.35	5.50	4.00	8	F1 OR F2

11-15-2010

NO	REVISION	BY & DATE	CHK
15	"B" DIM. 7.30 WAS 7.20 ECN #24492	WGJ 05-21-2012	EMH
14	ADDED KEY NOTE ISAAC 10-4117	TF 9/24/2010	
13	720 FRAME LENGTH BS DIM WAS 7.3	ST 7/30/2009	
12	REMOVED '2FF' DIMENSION CN 46055	DRS 04-20-2005	ML
11	720 ADDED 2FF DELETED 775/875 2FF CN 33748	RJW 03-09-2005	
10	REMOVED 720 '2FF' TEXT CN 33748	JMS 01-20-2005	

THIRD ANGLE PROJECTION

TOLERANCES UNLESS SPECIFIED

DEC	INCHES	
.X	±.1	
.XX	±.03	
.XXX	±.005	
.XXXX	±.0005	
ANG	±7'30"	

marathon electric

TITLE OUTLINE
180T FR. - BB - TS - TENV

MAT'L
FINISH

RFP
PREV
NETWORK FILE NAME SS68967

SIZE B
DRAWING NO SS68967
REV 15

DRAWN CAV 06-23-2000
CHK ML 06-23-2000
APPR GK 06-23-2000
SCALE 5:16
REF
FMF
PAGE OF

5/21/2012 2:52:35 PM - Converted by Connexus