SS330110

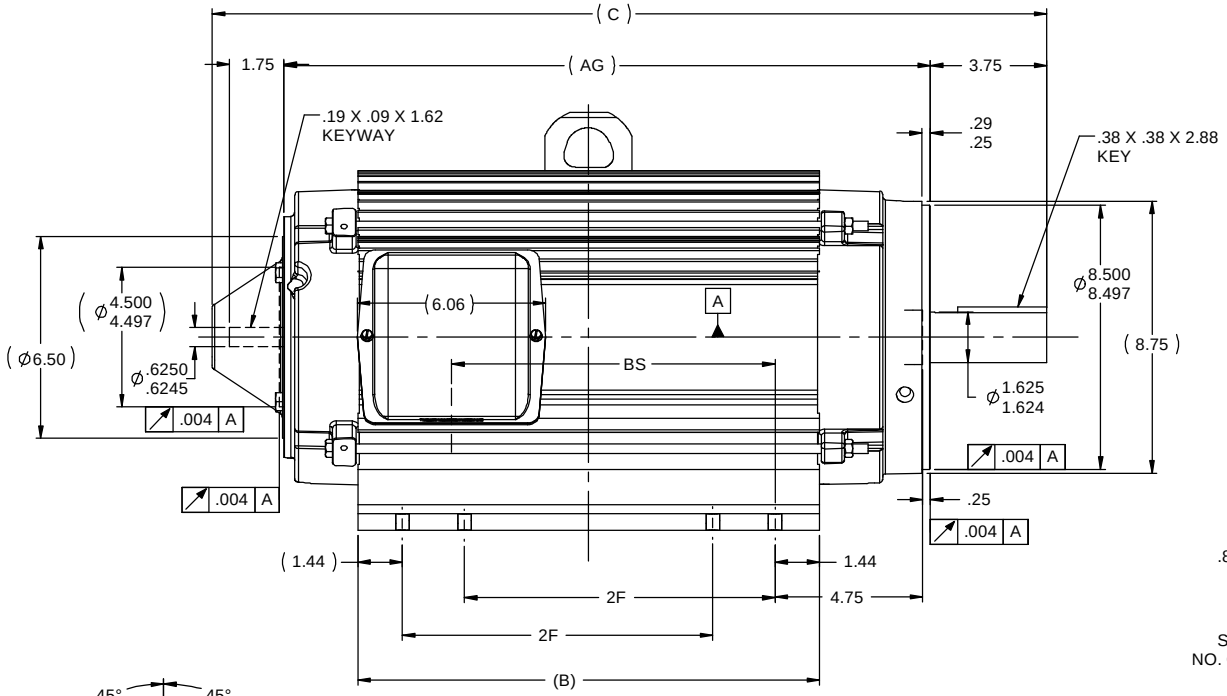

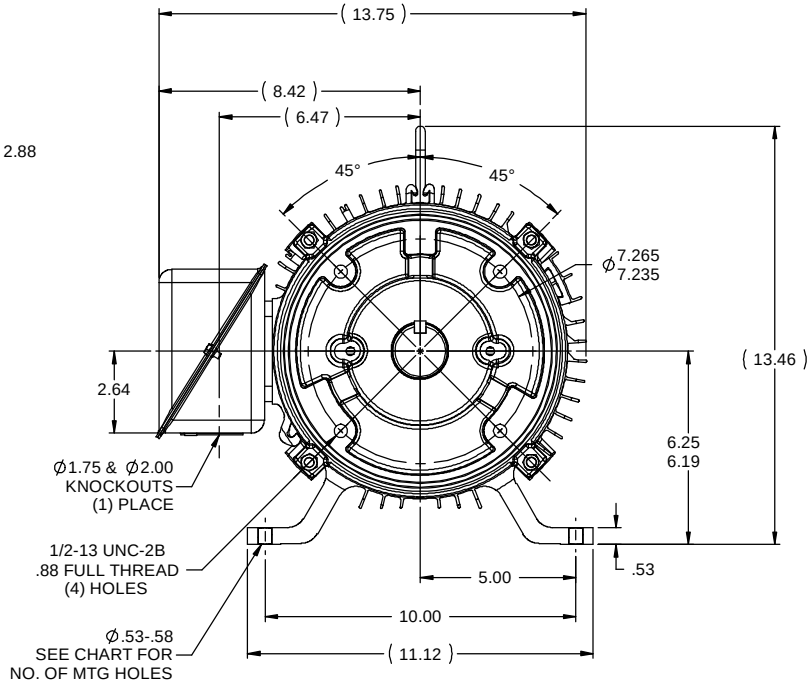

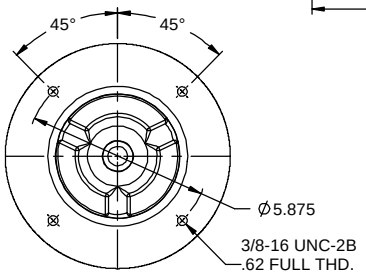

VIEW OF FRONT END
(SHAFT COVER REMOVER)

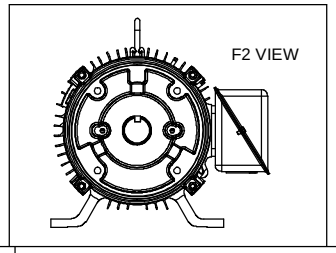

DASH	FRAME	C	B	2F	AG	BS	F1 / F2	NO. OF MTG HOLES
1325	254	25.37	13.37	8.25	19.31	8.90	YES	8
1475	254	26.87	14.87	8.25	20.81	10.40	YES	8
1475	256	26.87	14.87	10.00	20.81	10.40	YES	8

NOTES:
1) BOX CAN BE ROTATED IN 180 ° STEPS
2) SEE CHART FOR F2 CAPABILITY. IF YES;
BOX CAN BE MOUNTED ON OPPOSITE SIDE BY
REMOVING BRACKETS AND TURNING FRAME 180 °
3) NAMEPLATE TO BE READ FROM CONDUIT BOX SIDE OF MOTOR

NO	REVISION	BY & DATE	CHK
02	REISSUE - RE ADDED DASH TABLE ECN 25898	MSG 09-25-2012	MSG
01	REVISED 2FF DIMENSION TO 2F CN 29200-4321	CGD 9/19/2005	ML

TOLERANCES UNLESS SPECIFIED

DEC	INCHES
.X	±.1
.XX	±.03
.XXX	±.005
.XXXX	±.0005
ANG	±7'30"

MARATHON ELECTRIC

TITLE OUTLINE - C'FACE
210 FR. - 254/256 MTG - ALUMINUM FRAME

MAT'L
FINISH

RFP
DIST
CAD FILE SS330110

DRAWN	MJK 04-18-2005
CHK	ML 08-18-2005
APPR	CGD 08-18-2005
SCALE	1:4
REF	SS86478
FMF	
PREV	

SIZE B | DRAWING NO SS330110 | REV 02

THIS DRAWING IN DESIGN AND DETAIL IS OUR PROPERTY AND MUST NOT BE USED EXCEPT IN CONNECTION WITH OUR WORK. ALL RIGHTS OF DESIGN AND INVENTION ARE RESERVED.
THIS IS AN ELECTRONICALLY GENERATED DOCUMENT - DO NOT SCALE THIS PRINT

9/25/2012 1:21:04 PM - Converted by Connexus