SS203839

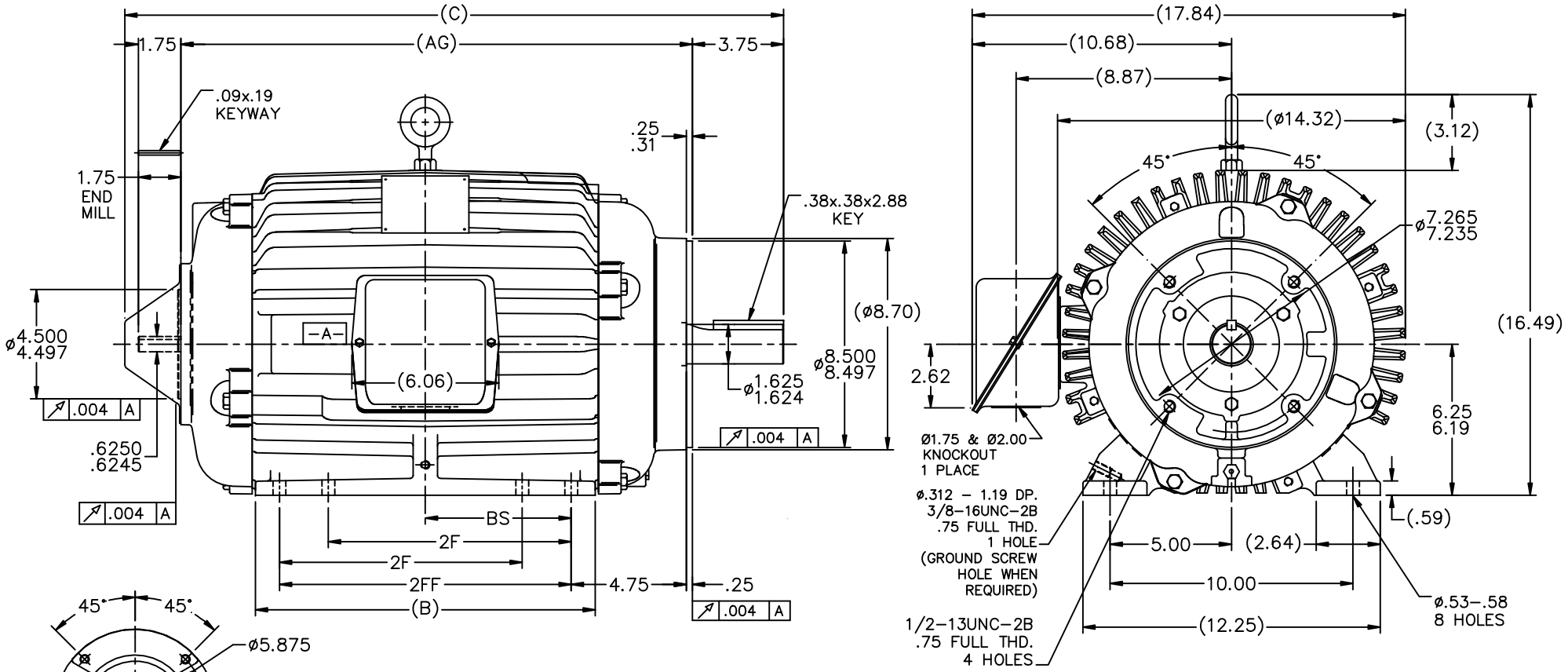

NOTES:
1. CONDUIT BOX CAN BE ROTATED IN 90° STEPS.
2. NAMEPLATE TO BE READ FROM CONDUIT BOX SIDE OF MOTOR.
3. MOTOR HAS F2 CAPABILITY.

DASH	FRAME	C	AG	B	2F	2FF		BS
1425	256TC	27.13	21.07	14.00	10.00	12.00		4.75

NO.	REVISION	BY & DATE	CHK	ANG	±7'30"
5	REV'D CONDUIT BOX NOTE TO MATCH BOM ECN #21632	WGJ 08-31-2011	EMH	DEC.	INCHES
4	ADDED GROUND SCREW HOLE	JMS 03/07/2005		.X	±.1
3	REISSUE; CORRECTED 2F AND 2FF DIM'S CN 32693	DRS 06-28-2004	ML	.XX	±.03
2	CHANGE 'BS' DIM CN32693	RWR 04-30-2004		.XXX	±.005
1	REVISED HOLES FROM 4 TO 8 PER CN 32628	CTO 03-15-2004	ML	.XXXX	±.0005

TOLERANCES UNLESS SPECIFIED

MARATHON ELECTRIC

TITLE OUTLINE – TENV – STL. C'BOX
250TC FR. – BB – C'FACE

MAT'L.
FINISH
CAD FILE ss203839
RFP 01-06-2004
DIST LB

DRAWN CTO 01-02-2004
CHK ML 01-06-2004
APPD TB 01-06-2004
SCALE 1=4
REF
FMF
PREV

SIZE B | DRAWING NO. SS203839 | PAGE OF | REV. 5

THIS DRAWING IN DESIGN AND DETAIL IS OUR PROPERTY AND MUST NOT BE USED EXCEPT IN CONNECTION WITH OUR WORK ALL RIGHTS OF DESIGN AND INVENTION ARE RESERVED
THIS IS AN ELECTRONICALLY GENERATED DOCUMENT – DO NOT SCALE THIS PRINT