SS200078

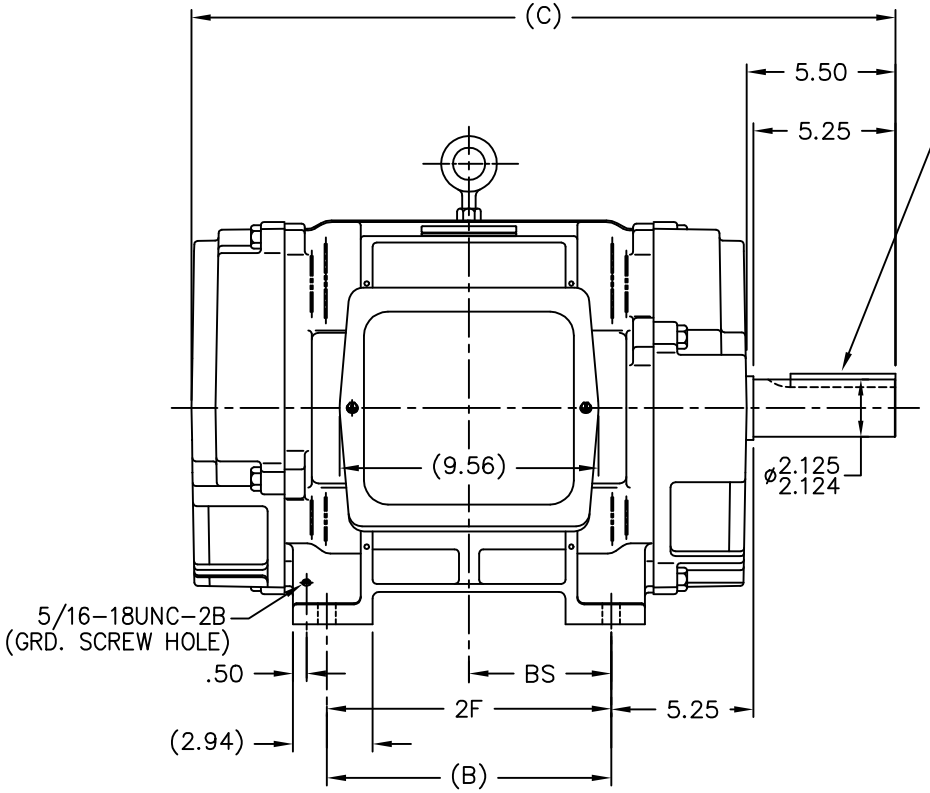

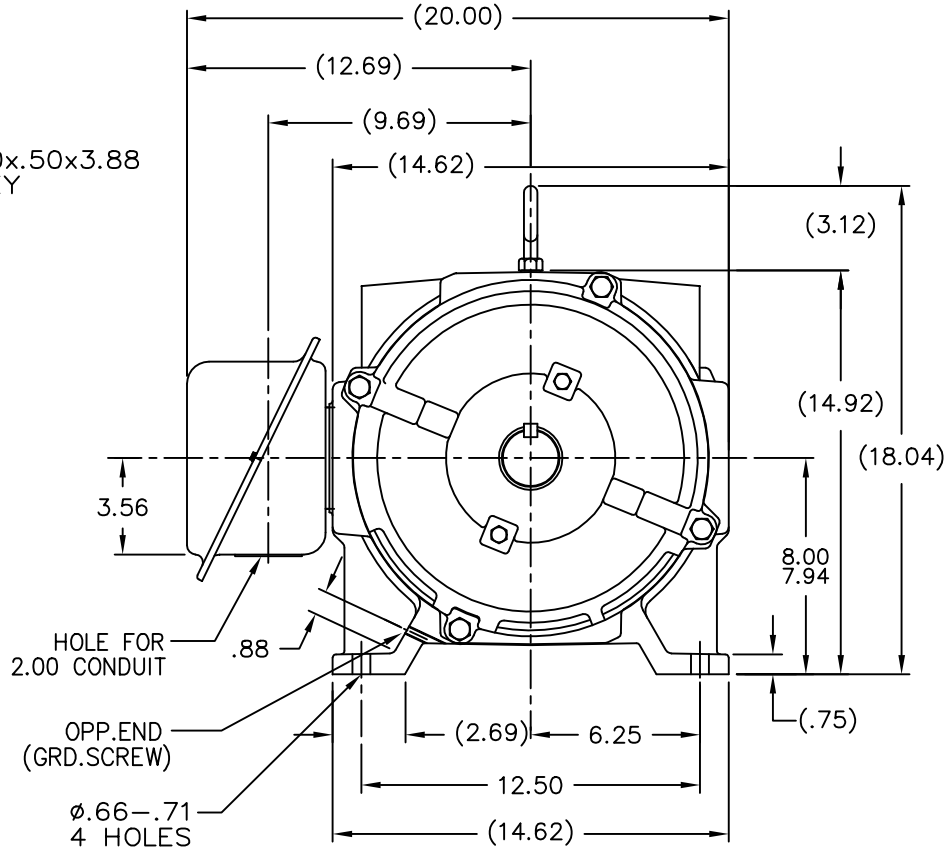

NOTES:
1. BOX CAN BE ROTATED IN 90° STEPS
2. BOX CAN BE MOUNTED ON OPPOSITE SIDE BY REMOVING BRACKETS AND TURNING FRAME 180°
3. NAMEPLATE TO BE READ FROM CONDUIT BOX SIDE OF MOTOR

DASH	FRAME	C	2F	B	BS	
1362	324T	26.00	10.50	13.00	5.25	
1512	326T	27.50	12.00	14.50	6.00	

NO.	REVISION	BY & DATE	CHK
7	REDAWN IN AUTOCAD	RWR 05/27/2004	ML
6	REVISED TO N.E.C. CONDUIT BOX CN28428	NJS 02/16/2000	ML
5	ADDED 5/16 GND. SCREW HOLE CN21725-1005	DRS 11/05/1996	ML
4	UPDATED SHAFT HEIGHT CN16763	DRS 08/13/1996	JPN

TOLERANCES UNLESS SPECIFIED

	DEC.	INCHES
	.X	±.1
	.XX	±.03
	.XXX	±.005
	.XXXX	±.0005
ANG		±7'30"

MARATHON ELECTRIC

TITLE OUTLINE -DR.PR. -CAST IRON 320T FR. -BB -TS -D.E.V.

MAT'L.

FINISH

CAD FILE ss200078

RFP

DIST LB

DRAWN JL 02/17/1988
CHK JPN 03/08/1998
APPD LS 03/21/1988
SCALE 1=4.5
REF
FMF
PREV

SIZE B | DRAWING NO. SS200078 | PAGE 1 OF 1 | REV. 7

THIS DRAWING IN DESIGN AND DETAIL IS OUR PROPERTY AND MUST NOT BE USED EXCEPT IN CONNECTION WITH OUR WORK ALL RIGHTS OF DESIGN AND INVENTION ARE RESERVED
THIS IS AN ELECTRONICALLY GENERATED DOCUMENT - DO NOT SCALE THIS PRINT