SS69060

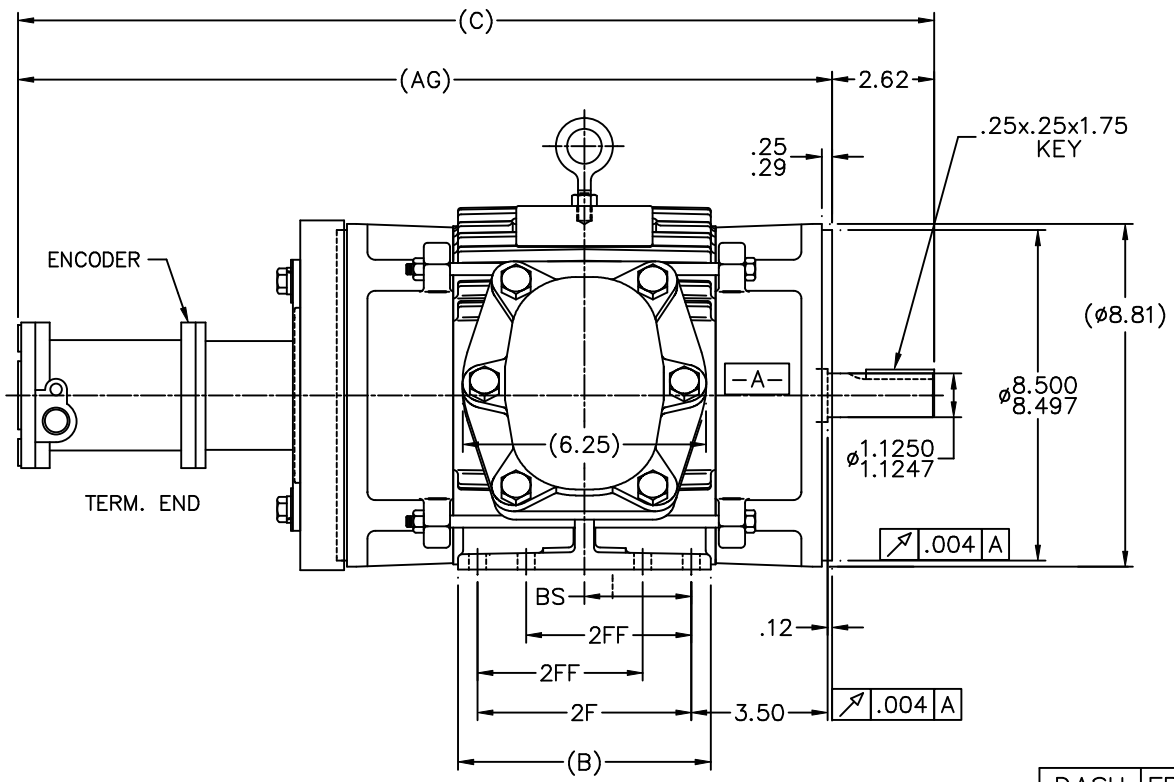

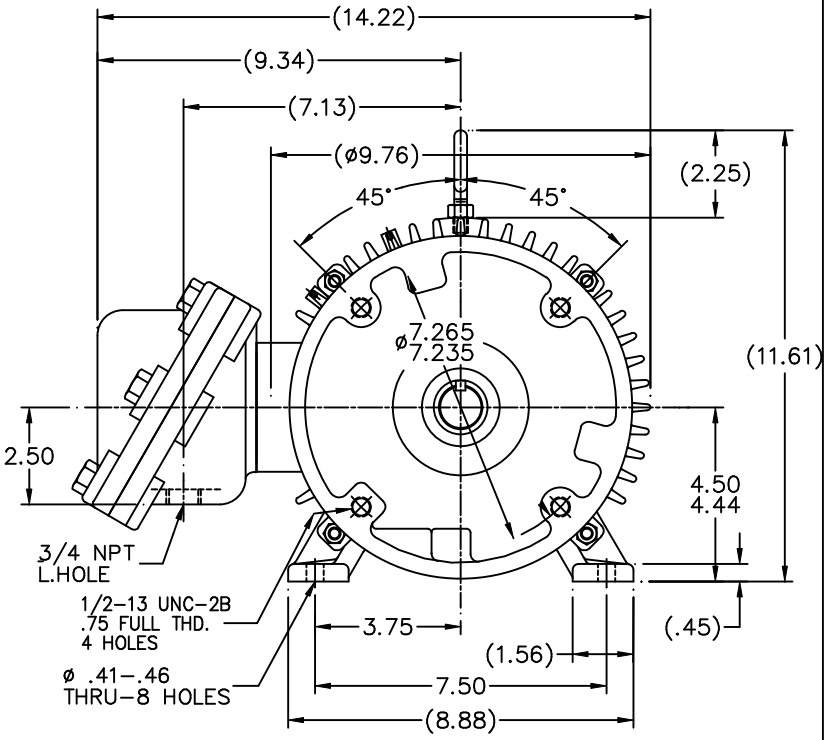

DASH	FRAME	B	C	2F	2FF	AG	BS	MOUNTING
575	182TC	5.50	22.57	–	4.50	12.69	2.25	F1 ONLY
675	182TC	6.50	23.57	5.50	4.50	13.69	2.75	F1 ONLY
675	184TC	6.50	23.57	5.50	–	13.69	2.75	F1 OR F2
800	182TC	7.75	24.82	6.75	4.50	14.94	2.75	F1 OR F2
800	184TC	7.75	24.82	–	5.50	13.94	2.75	F1 OR F2

NOTES:
1. CONDUIT BOX CAN BE ROTATED IN 90° STEPS.
2. CONDUIT BOX CAN BE MOUNTED ON OPPOSITE SIDE BY REMOVING BRACKETS AND TURNING FRAME 180°.
3. NAMEPLATE TO BE READ FROM CONDUIT BOX SIDE OF MOTOR

NO.	REVISION	BY & DATE	CHK
4	ADDED (C) & (AG) DIM.	RJW 04-21-2005	ML
3	ADDED 6.75" 2F DIM. TO		
	182TC – DASH 800 CN 33665	RJW 10-25-2004	
2	REVISED O.D.E. BRACKET AND ADDED		
	ADAPTOR CN 29200–1289	BJW 01-19-2001	
1	NEW DRAWING MU 34791	BJW 12-29-2000	

TOLERANCES UNLESS SPECIFIED

	DEC.	INCHES
	.X	±.1
	.XX	±.02
	.XXX	±.005
	.XXXX	±.0005
ANG		±7'30"

MARATHON ELECTRIC

TITLE OUTLINE – C'FACE
180TC FR. – EXP.PR. – BEI H38 TACH.

MAT'L.

FINISH

CAD FILE SS69060

RFP

DIST LB

DRAWN BJW 12-19-2000
CHK ML 12-28-2000
APPD PH 12-29-2000
SCALE 5=16
REF
FMF
PREV

SIZE B | DRAWING NO. SS69060 | PAGE OF | REV. 4

THIS DRAWING IN DESIGN AND DETAIL IS OUR PROPERTY AND MUST NOT BE USED EXCEPT IN CONNECTION WITH OUR WORK ALL RIGHTS OF DESIGN AND INVENTION ARE RESERVED
THIS IS AN ELECTRONICALLY GENERATED DOCUMENT – DO NOT SCALE THIS PRINT