SS203518

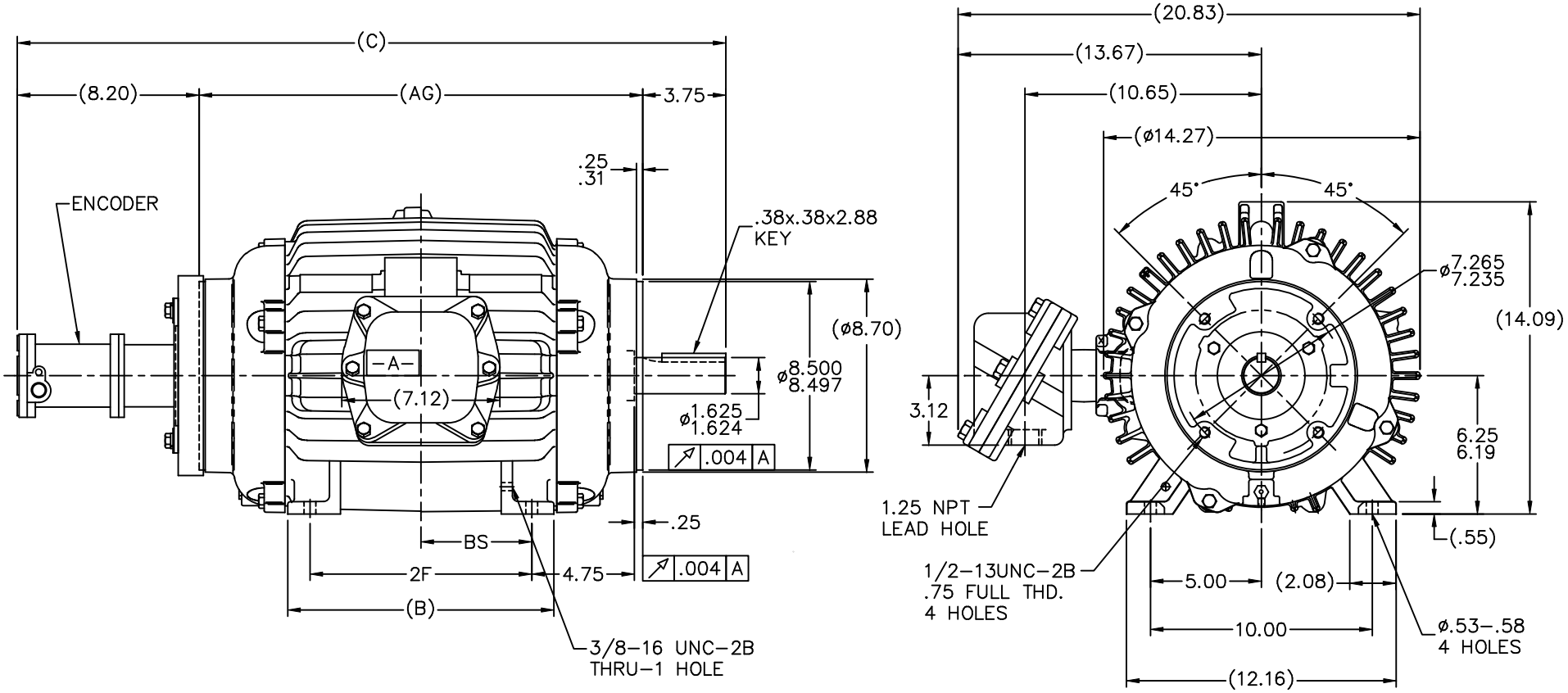

NOTES:
1. BOX CAN ONLY BE ROTATED CLOCKWISE UP TO 270' FROM ITS ORIGINAL POSITION.
2. NAMEPLATE TO BE READ FROM C'BOX SIDE OF MOTOR.

DASH	FRAME	C	AG	B	2F	BS		
1050	254TC	30.20	18.25	10.25	8.25	4.12		
1225	256TC	31.95	20.00	12.00	10.00	5.00		

NO.	REVISION	BY & DATE
2	REDRAWN IN AUTOCAD	TAT 06-24-2005
1	NEW DRAWING MU29397	MJD 03-07-2000

TOLERANCES UNLESS SPECIFIED

DEC.	INCHES
.X	±.1
.XX	±.03
.XXX	±.005
.XXXX	±.0005
ANG	±7'30"

DRS CHK

MARATHON ELECTRIC

TITLE OUTLINE – BEI HS38 ENCODER
250T FR. – EXP. PR. – TGN – 'C' FACE

MAT'L.
FINISH

DRAWN MJD 03-06-2000
CHK ML 03-07-2000
APPD DR 03-07-2000
SCALE 7=32
REF
FMF
PREV

THIS DRAWING IN DESIGN AND DETAIL IS OUR PROPERTY AND MUST NOT BE USED EXCEPT IN CONNECTION WITH OUR WORK ALL RIGHTS OF DESIGN AND INVENTION ARE RESERVED
THIS IS AN ELECTRONICALLY GENERATED DOCUMENT – DO NOT SCALE THIS PRINT

RFP
DIST LB
CAD FILE ss203518
SIZE B
DRAWING NO. SS203518
PAGE OF
REV. 2