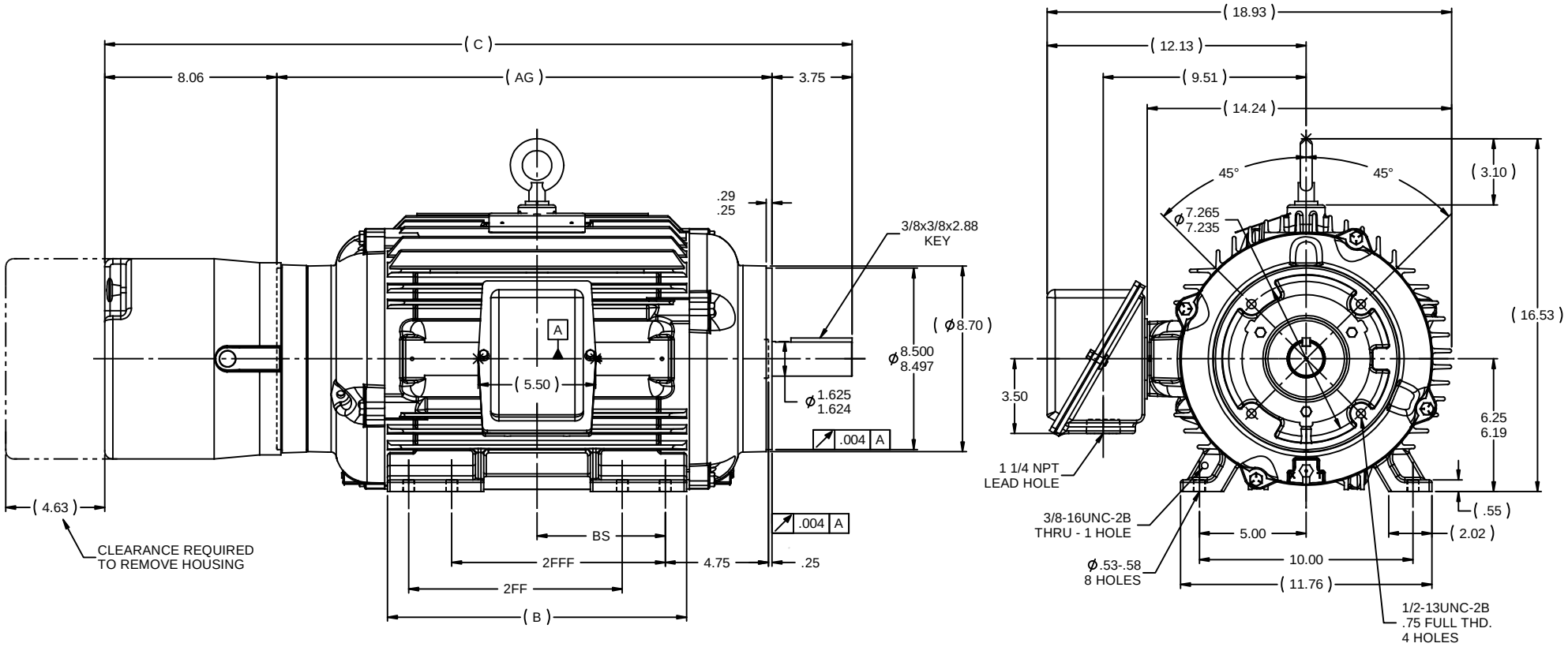

NOTES:
1. CONDUIT BOX CAN BE ROTATED IN 90° STEPS.
2. CONDUIT BOX CAN BE MOUNTED ON OPPOSITE SIDE BY REMOVING BRACKETS AND TURNING FRAME 180°.
3. NAMEPLATE TO BE READ FROM CONDUIT BOX SIDE OF MOTOR.

DASH	FRAME	C	AG	B	2FF	2FFF	BS
1425	256TC	35.00	23.18	14.00	10.00	10.00	6.00

NO	REVISION	BY & DATE	CHK
5	REVISED TO NEW FRAME DESIGN - REMOVED TACH - REDUCED 'C' DIM. BY .28 MU95409	MSG 5/6/2010	MJS
4	REVISED GROUND SCREW HOLE CN46168	RJW 08-15-2005	ML
3	REMOVED THE '2F' FROM SIDE VIEW & BOX/CHG. HOLE QTY. FOR ϕ.53-.58 HOLE F-4 T-8 CN29100-4583	RWR 02-17-2005	ML
2	CORRECTED 'C' DIM IN DASH TABLE	TAT 05-30-2004	ML

TOLERANCES UNLESS SPECIFIED

DEC	INCHES
.X	±.1
.XX	±.03
.XXX	±.005
.XXXX	±.0005
ANG	±7'30"

MARATHON ELECTRIC

TITLE OUTLINE - TENV
250TC FR. - STEARNS BRAKE & PROV. FOR TACH.

MAT'L
FINISH

DRAWN	RWR 04-30-2004
CHK	ML 05-06-2004
APPR	TLB 05-10-2004
SCALE	7:32
REF	05-10-2004
FMF	CN37710
PAGE	OF

THIRD ANGLE PROJECTION

RFP
PREV
NETWORK FILE NAME SS203867

SIZE B
DRAWING NO SS203867
REV 5

5/7/2010 10:57:01 AM