034921

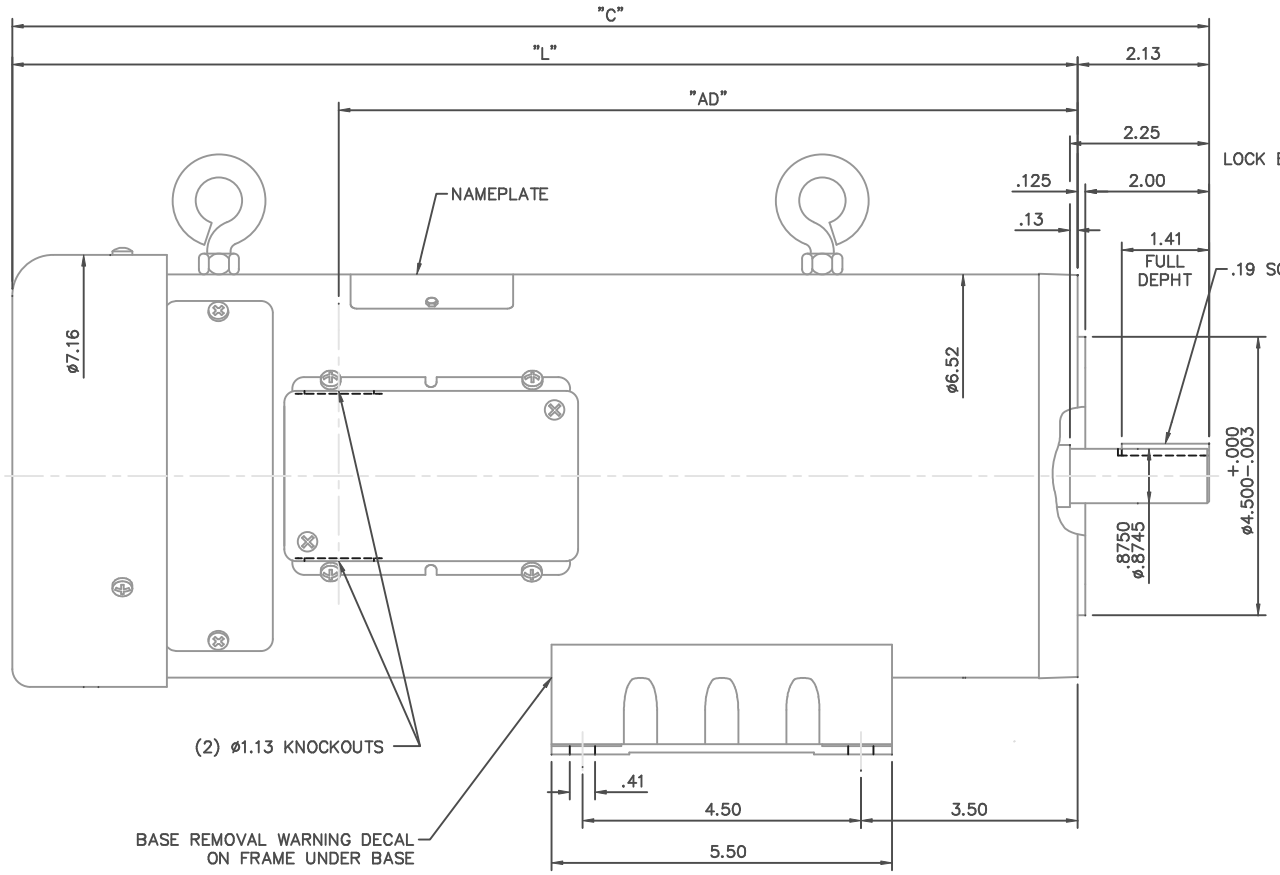

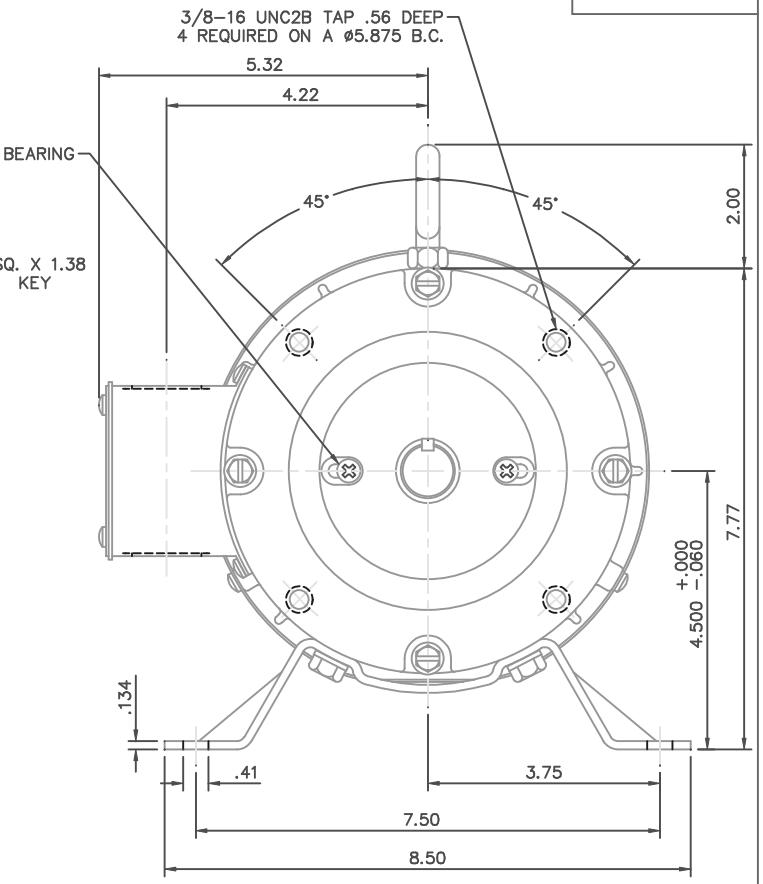

NOTES:

1. MAXIMUM FACE RUNOUT TO BE .004 T.I.R.
2. MAXIMUM PILOT ECCENTRICITY .004 T.I.R
3. PERMISSIBLE SHAFT RUNOUT .002 T.I.R.
4. GASKETS THROUGHOUT.

JS180	18.84	16.72	11.44	TS180	22.34	20.22	14.94
HS180	18.34	16.22	10.94	RS180	21.84	19.72	14.44
GS180	17.84	15.72	10.44	PS180	21.34	19.22	13.94
FS180	17.34	15.22	9.94	NS180	20.84	18.72	13.44
ES180	16.84	14.72	9.44	MS180	20.34	18.22	12.94
DS180	16.34	14.22	8.94	LS180	19.84	17.72	12.44
CS180	15.84	13.72	8.44	KS180	19.34	17.22	11.94
FRAME	"C"	"L"	"AD"	FRAME	"C"	"L"	"AD"

NO.	REVISION	BY & DATE
01	MOVED ø1.13 KNOCKOUT NOTE TO SIDE VIEW/ECR85901.	RPB 7/2/04

TOLERANCES UNLESS SPECIFIED

DEC.	INCHES
.X	±.1
.XX	±.03
.XXX	±.005
.XXXX	±.0005
ANG	±1/2°

BC
CHK

MARATHON ELECTRIC

TITLE OUTLINE – 56 FRAME D.C. MOTOR
140TC FACE & 182 RIGID BASE – TEFC

MAT'L.
FINISH

DRAWN	RPB 2/25/02
CHK	
APPD	B.C. 2/25/02
SCALE	1=2
REF	033945
FMF	128017.00
PREV	

THIS DRAWING IN DESIGN AND DETAIL IS OUR PROPERTY AND MUST NOT BE USED EXCEPT IN CONNECTION WITH OUR WORK ALL RIGHTS OF DESIGN AND INVENTION ARE RESERVED
THIS IS AN ELECTRONICALLY GENERATED DOCUMENT – DO NOT SCALE THIS PRINT

RFP
DIST
CAD FILE 034921
SIZE B
DRAWING NO. 034921
REV. 01

9/26/2008 4:27:37 PM