10012729289

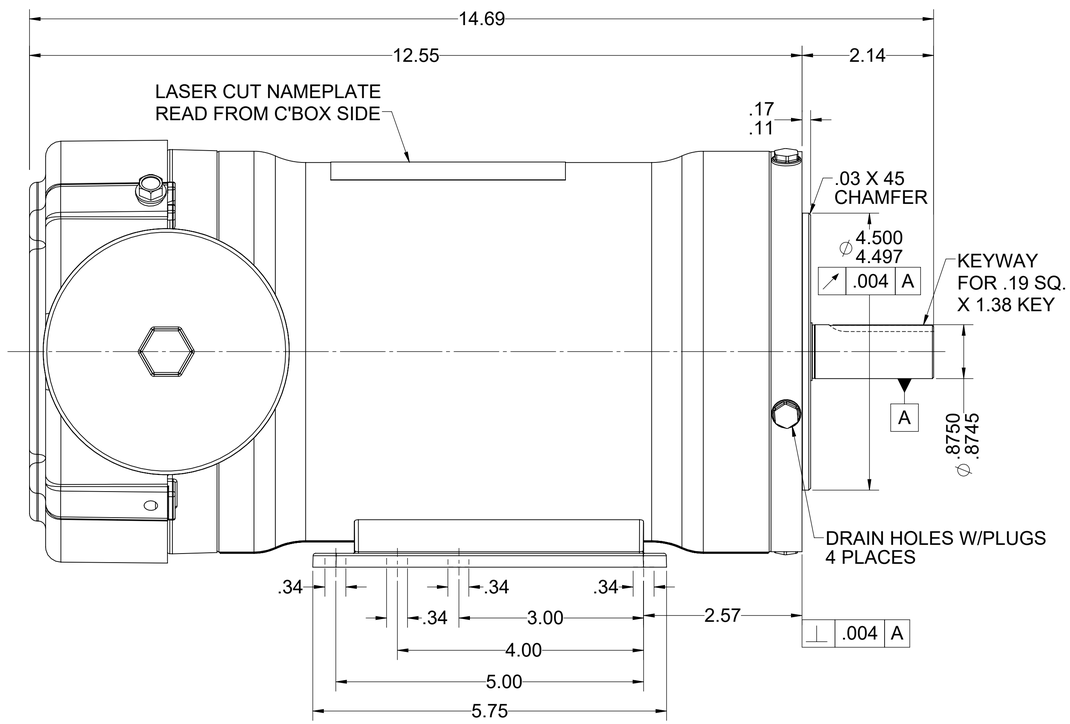

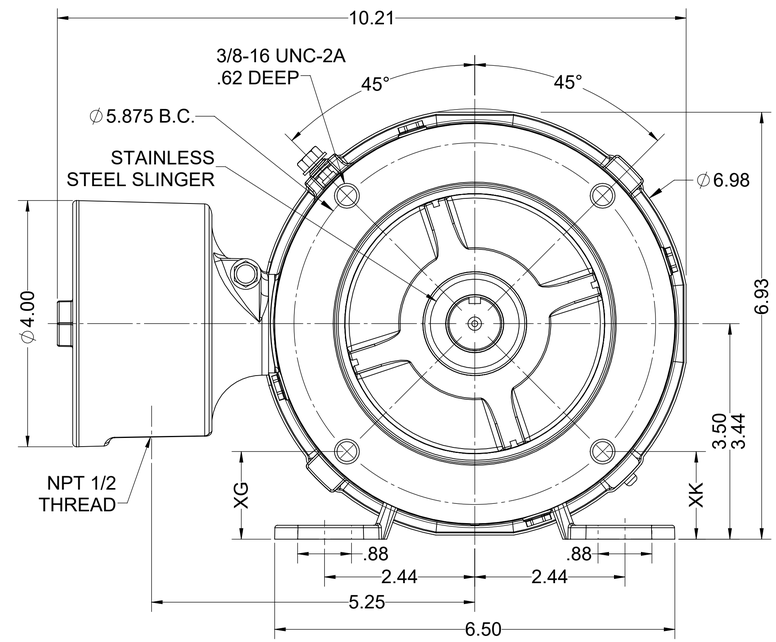

DIFFERENCE BETWEEN XG
AND XK NOT TO EXCEED .03

UNLESS OTHERWISE SPECIFIED DIMENSIONS
WITHOUT TOLERANCES ARE REFERENCE ONLY

NOTES

LEADS

TERMINAL BLOCK PLUS GROUND

EXTERNAL CONNECTIONS

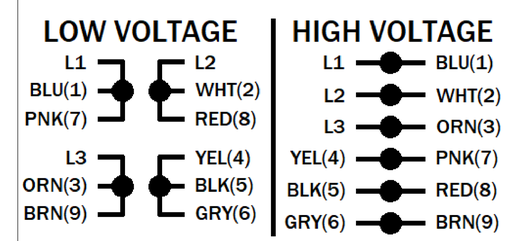

MOTOR DATA

TYPE	POLY - INVERTER DUTY			SHAFT MATERIAL	304 S.S. EXTENSION	CUSTOMER NAME	WEG HYDRODUTY
HZ	60	HZ	50	FRAME 143/5TC	PHASE 3	CUSTOMER PART NUMBER	00112ET3EHD143TC
VOLTS	230/460	VOLTS	190/380	ENCLOSURE TEFC	PAINT NONE	VIEWING LEAD END: MOTOR ROTATION	REV
HP[kW] 1.00 []	SF 1.15	Hp[kW] 0.75 [0.560]	SF 1.0	ENVIRONMENT WASHDOWN	BEARINGS BALL	VIEWING LEAD END: ASSEMBLY ROTATION	CW
RPM	1150	RPM	950	I.P.CODE IP69K	END CAP N/R	ASSEMBLY VOLTAGE	HIGH
F.L. AMPS	3.28/1.64	F.L. AMPS	3.26/1.63	NEMA NOM. EFF. 82.5%	IE2 73.1%	THERMAL PROTECTION TYPE	NONE
S.F. AMPS	4.0/2.0	S.F. AMPS	-			MOUNTING POSITION	ALL POSITIONS
						WINDING AND TEST SPEC	-
TIME RATE	CONT	MAX AMB	40				
KVA CODE	J	INS CLASS	F			DRAWN: DMILOSTAN 12/06/24	

ECN	REV	CHANGE DESCRIPTION	DATE/ INITIALS
-	03	ADD CATALOG NUMBER, UPDATE CONNECTIONS AND EFFICIENCY RATINGS.	11/21/2025 ZM

THE INFORMATION DISCLOSED HEREIN INCLUDES PROPRIETARY RIGHTS OF WEG. ANY REPRODUCTION OR TRANSFERRAL OF INFORMATION FROM THIS DOCUMENT IS FORBIDDEN WITHOUT PRIOR CONSENT.

SIZE D | DWG NO. 10012729289

SCALE: 13:16 | DO NOT SCALE DRAWING | SHEET 1 OF 1

10012729289