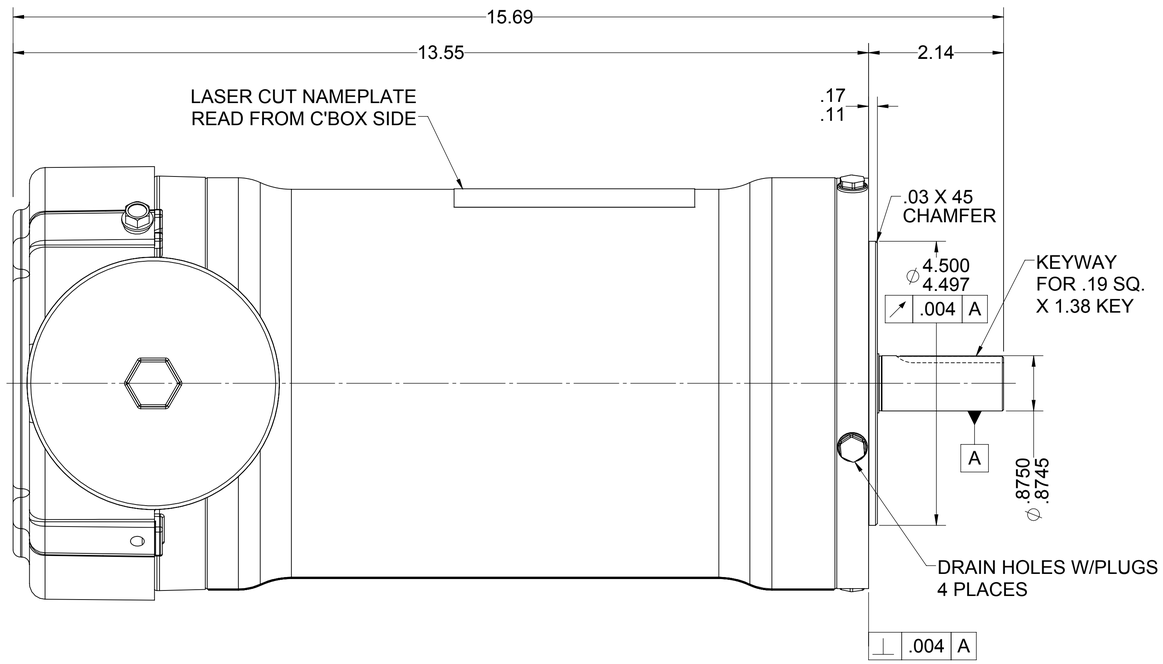

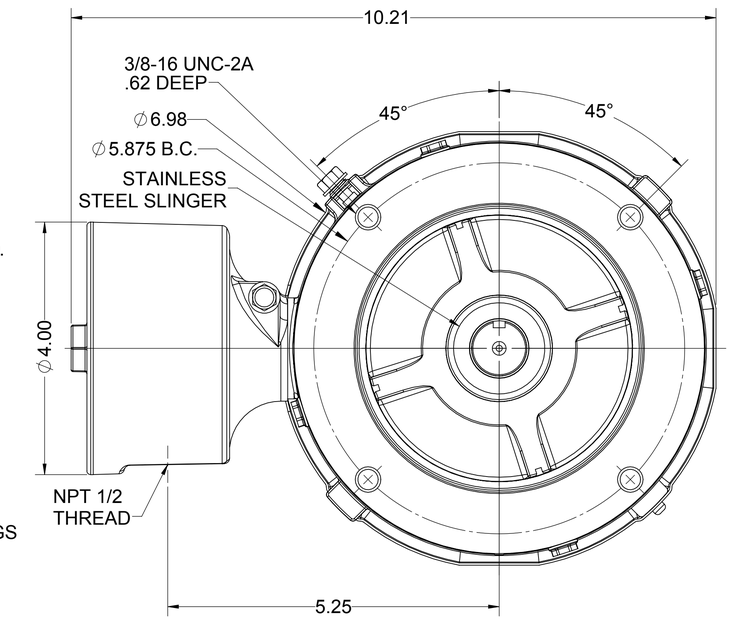

UNLESS OTHERWISE SPECIFIED DIMENSIONS WITHOUT TOLERANCES ARE REFERENCE ONLY

NOTES

LEADS

TERMINAL BLOCK PLUS GROUND

EXTERNAL CONNECTIONS

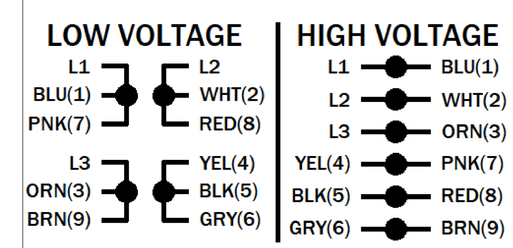

MOTOR DATA

TYPE	POLY - INVERTER DUTY			SHAFT MATERIAL	304 S.S. EXTENSION			CUSTOMER NAME	WEG HYDRODUTY		
HZ	60	HZ	50	FRAME	143/5TC	PHASE	3	CUSTOMER PART NUMBER	00158ET3EHDR145TC		
VOLTS	230/460	VOLTS	190/380	ENCLOSURE	TEFC	PAINT	NONE	VIEWING LEAD END	MOTOR ROTATION	REV	
HP[kW] 1.5 [-]	SF 1.15	Hp[kW] 1.0 [0.746]	SF 1.0	ENVIRONMENT	WASHDOWN	BEARINGS	BALL		ASSEMBLY ROTATION	REV	
RPM	1750	RPM	1460	I.P.CODE	IP69K	END CAP	N/R	ASSEMBLY VOLTAGE	HIGH		
F.L. AMPS	4.26/2.13	F.L. AMPS	4.14/2.07	NEMA NOM. EFF.	86.5%	IE3	82.5%	THERMAL PROTECTION TYPE	NONE		
S.F. AMPS	4.8/2.4	S.F. AMPS	-					MOUNTING POSITION	ALL POSITIONS		
								WINDING AND TEST SPEC	-		
TIME RATE	CONT	MAX AMB	40								
KVA CODE	N	INS CLASS	F					DRAWN: ITORRES 12/13/24			

ECN	REV	CHANGE DESCRIPTION	DATE/ INITIALS
-	03	UPDATED IE3 EFFICIENCY.	08/13/2025 ZM

THE INFORMATION DISCLOSED HEREIN INCLUDES PROPRIETARY RIGHTS OF WEG. ANY REPRODUCTION OR TRANSFERRAL OF INFORMATION FROM THIS DOCUMENT IS FORBIDDEN WITHOUT PRIOR CONSENT.

SIZE **D**

DWG NO. **10012729630**

SCALE: 3:4 | DO NOT SCALE DRAWING | SHEET 1 OF 2

10012729630