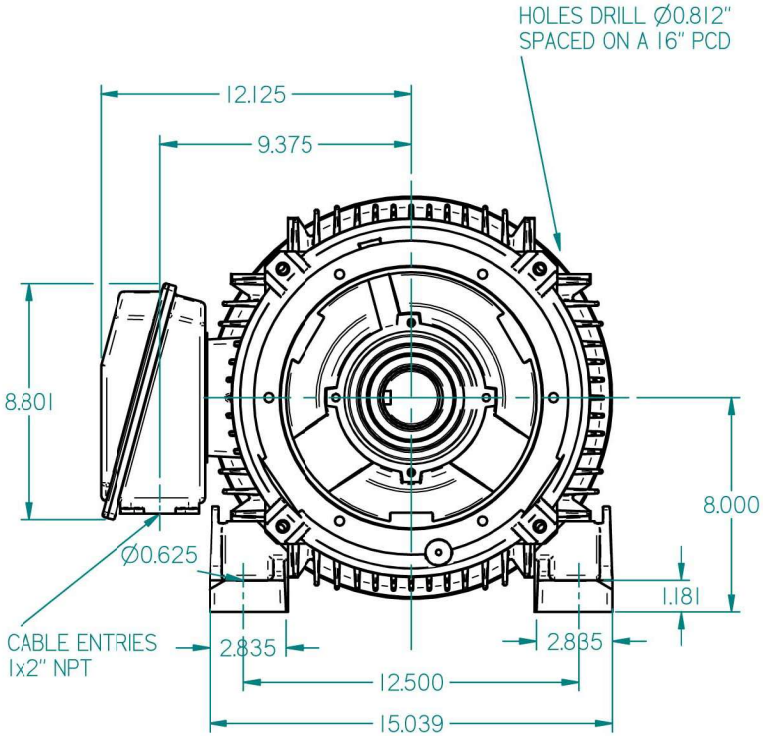


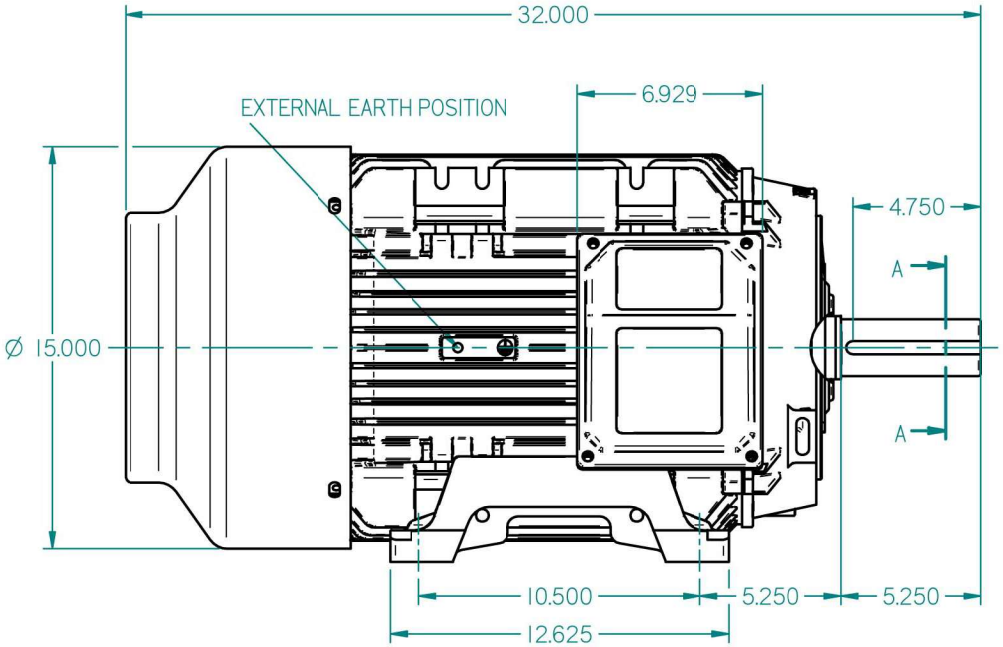


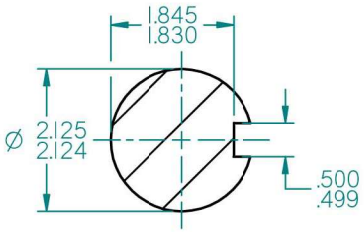


A–A
1:2

STANDARD TERMINAL BOX POSITION IS 9 O'CLOCK AS SHOWN.
CONDUIT ENTRIES:- TERMINAL BOX CAN BE ROTATED AT 90° INTERVALS
(CONDUIT ENTRY POSITION SHOWN FOR ILLUSTRATION ONLY)

ALL DIMENSIONS IN INCHES

FIRST ANGLE PROJECTION

BROOK CROMPTON

| SHEET SIZE | TITLE: | | NAME | DATE | DRG. No. |
|---|---|---|---|---|---|
| A3 | OUTLINE DIMENSION DRAWING W CAST IRON TOTALLY ENCLOSED FAN COOLED W-DF324T-NX FRAME FOOT MOUNTED MOTOR | DRAWN | DL | 10-01-13 | DRG. REF. |
| | | CHECKED | | | REVISION: DATE: |
| | | SCALE | 1 : 5 | | |