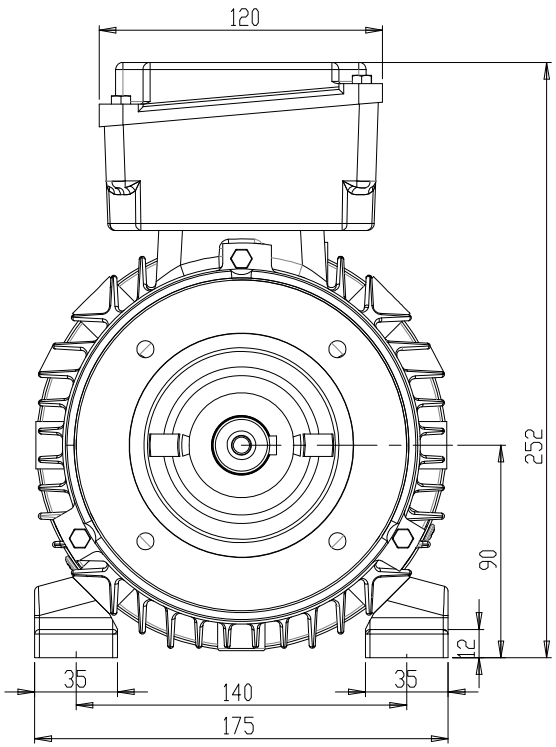

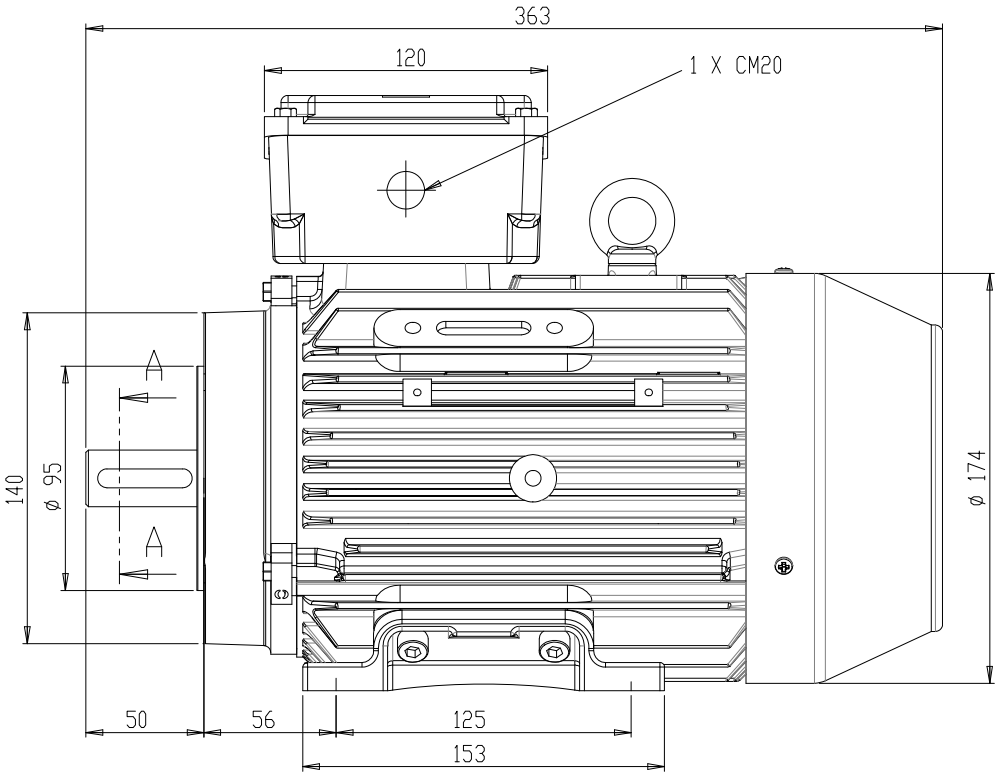

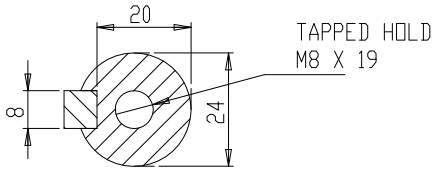

SECTION A-A

SCALE 1 : 1

W PREMIUM CAST IRON 90L B34
TOTALLY ENCLOSED FAN COOLED

BROOK CROMPTON

W-DF90 B34

A3

www.brookcromptonna.com