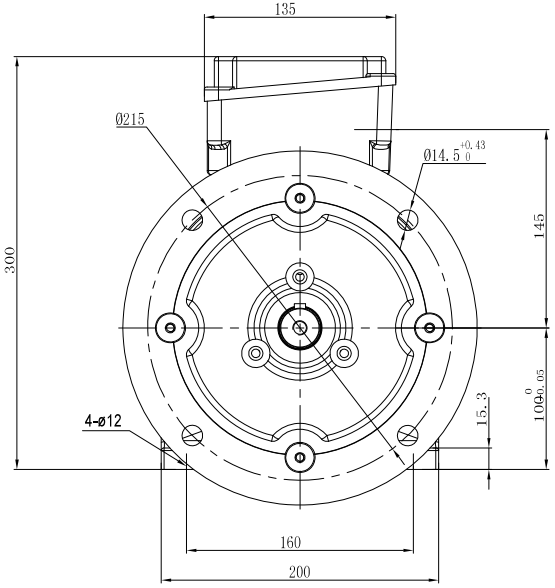

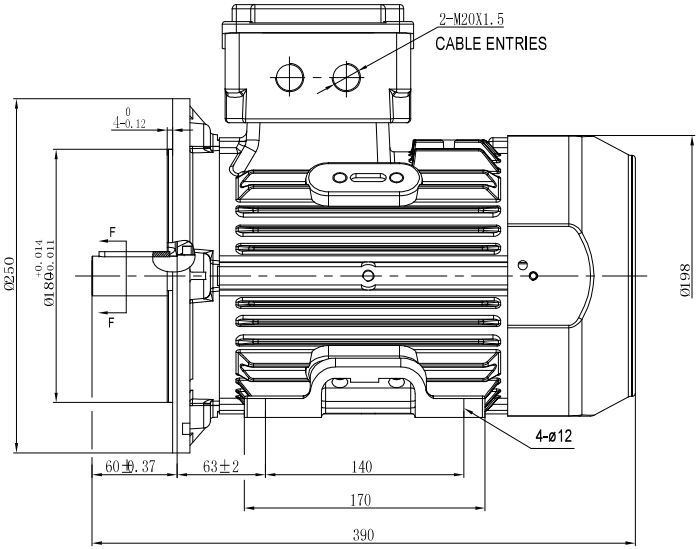

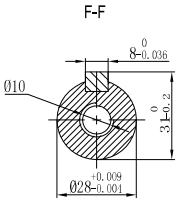

STANDARD TERMINAL BOX POSITION IS 12 O'CLOCK AS SHOWN.

CONDUIT ENTRIES:- TERMINAL BOX CAN BE ROTATED AT 90° INTERVALS

BROOK CROMPTON				A
WP-DF100 B35		B		1:6
	1		1	