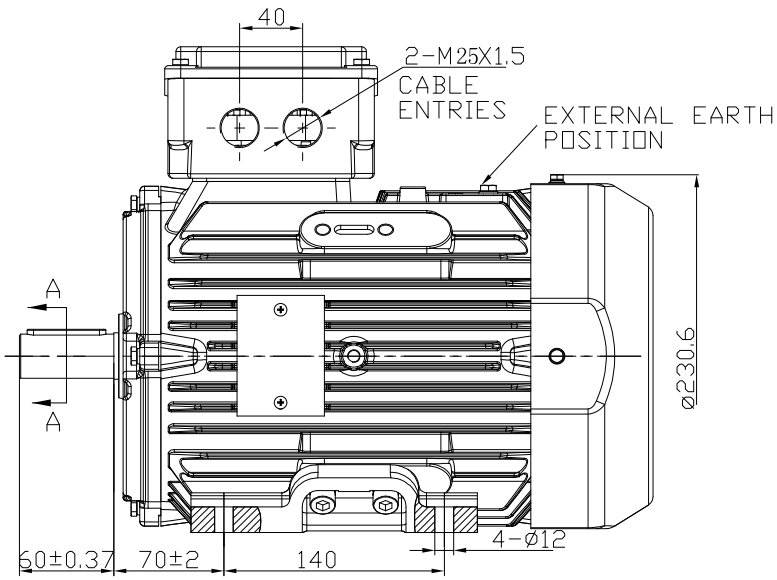


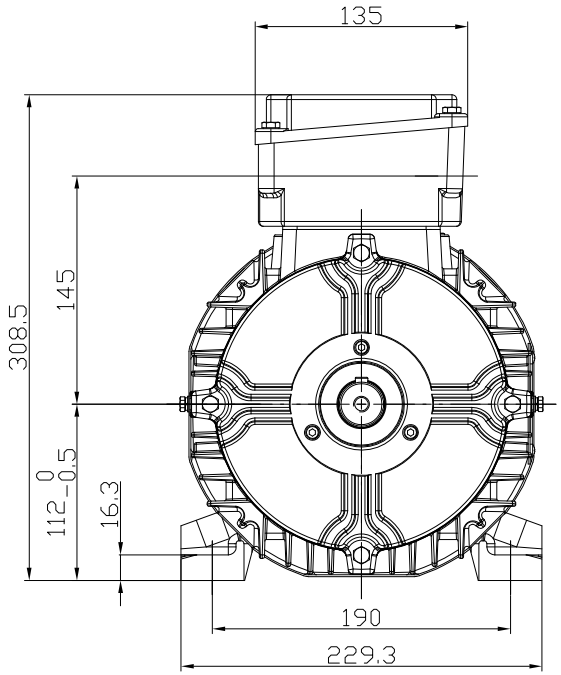


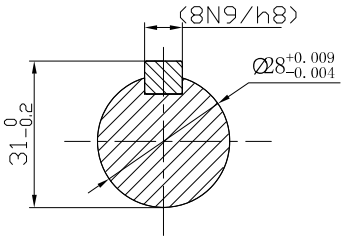


A-A
1:1

STANDARD TERMINAL BOX POSITION IS 12 O'CLOCK AS SHOWN.
CONDUIT ENTRIES:- TERMINAL BOX CAN BE ROTATED AT
90°INTERVALS

WP-DF112MVF4

1:3

BROOK CROMPTON