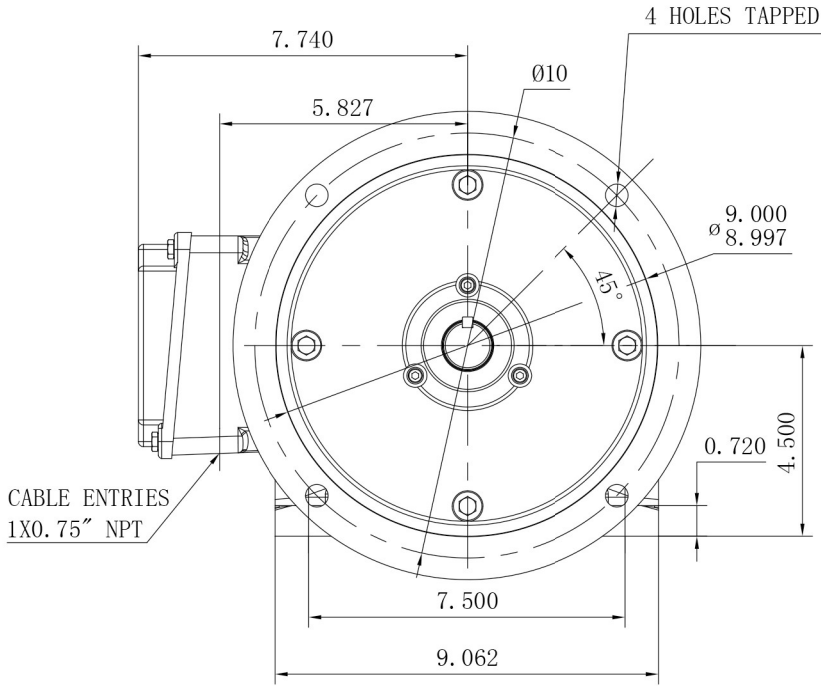

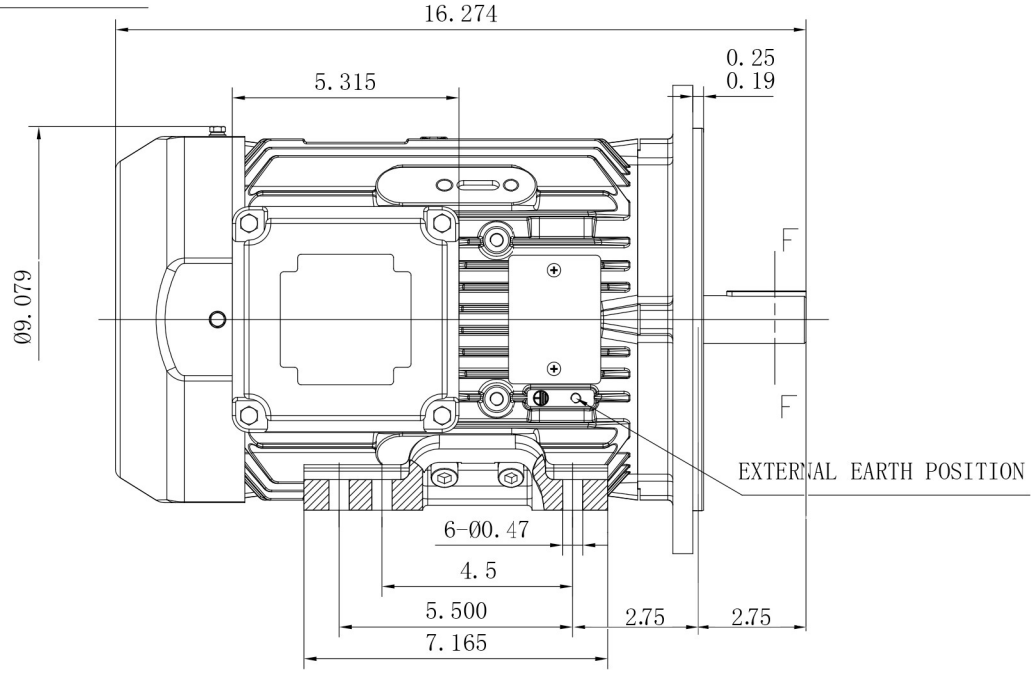

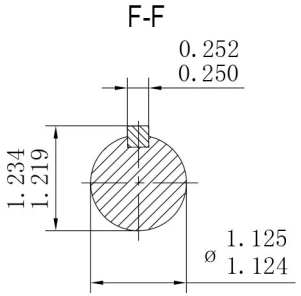

STANDARD TERMINAL BOX POSITION IS 9 O'CLOCK AS SHOWN.

CONDUIT ENTRIES:- TERMINAL BOX CAN BE ROTATED AT 90° INTERVALS

WP-DF184-4-DF

1:3

BROOK CROMPTON