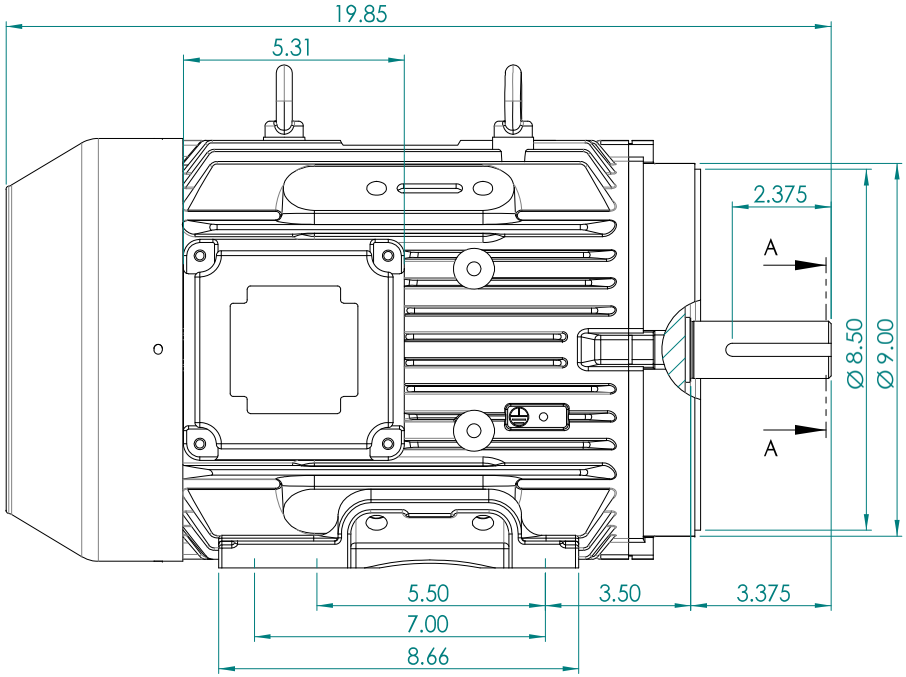

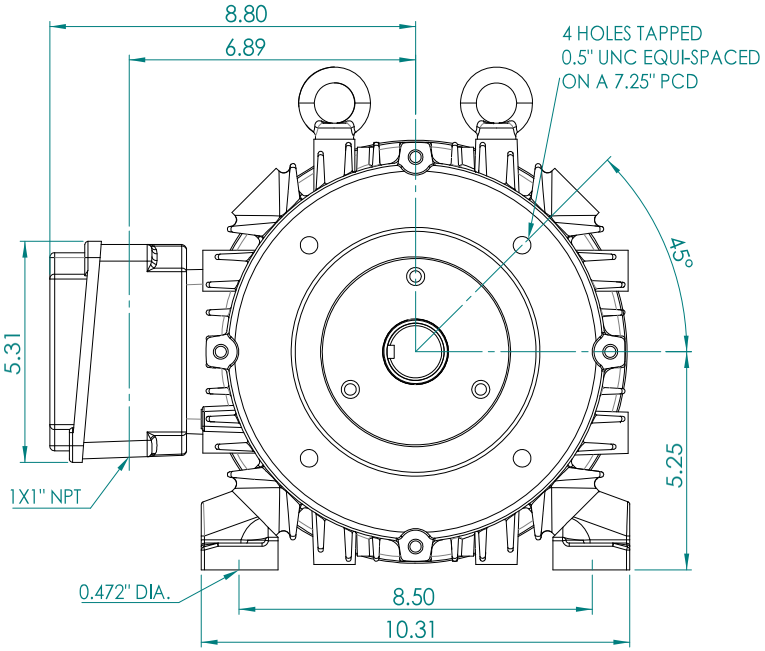

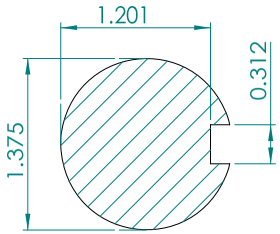

SECTION A-A
SCALE 1 : 1

BROOK CROMPTON

WPN-DF213/5TC-V

A3

SHEET

www.brookcromptonna.com