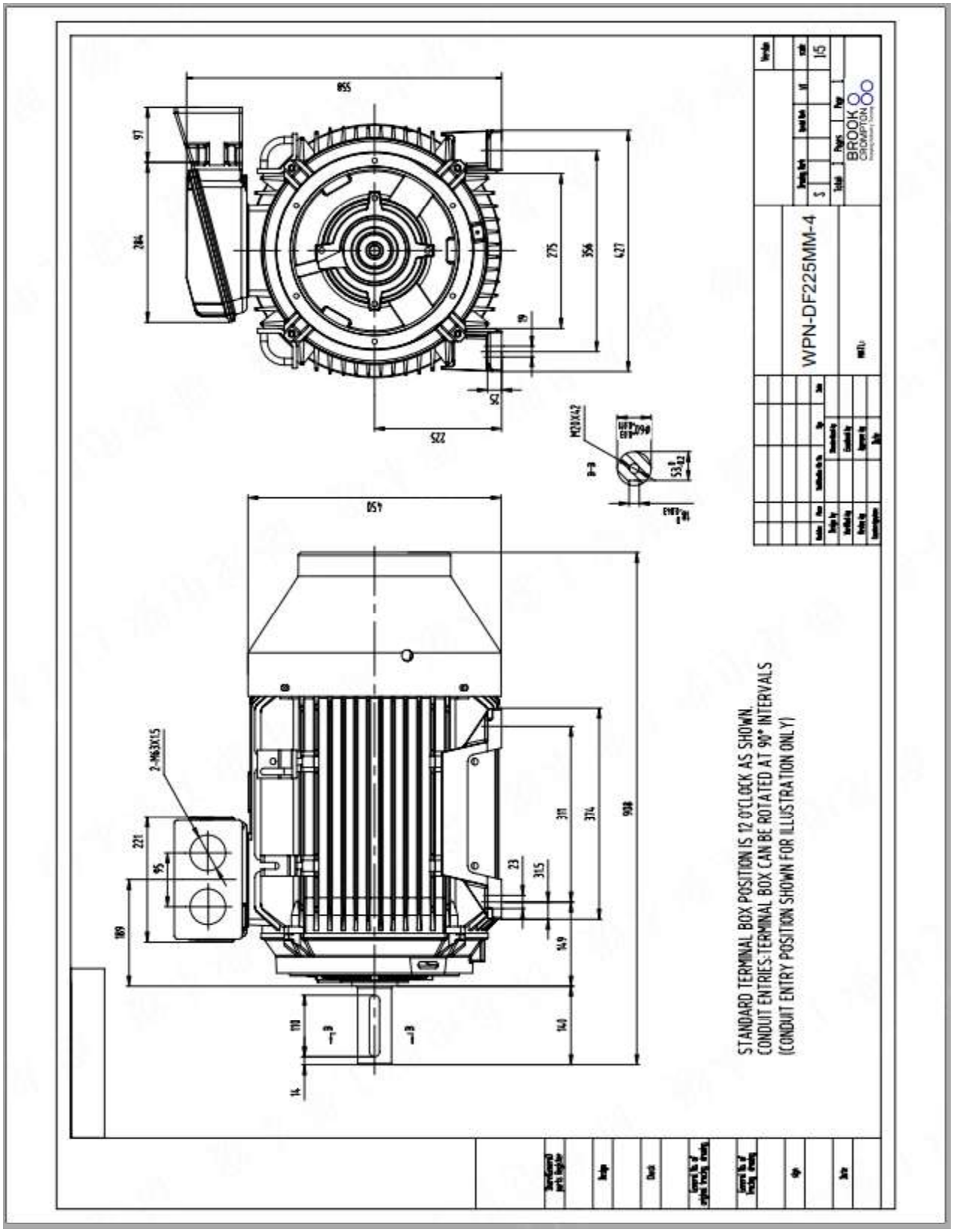
WPN-DF225MM-4
BROOK CROMPTON
STANDARD TERMINAL BOX POSITION IS 12 O'CLOCK AS SHOWN.
CONDUIT ENTRIES-TERMINAL BOX CAN BE ROTATED AT 90° INTERVALS
(CONDUIT ENTRY POSITION SHOWN FOR ILLUSTRATION ONLY)