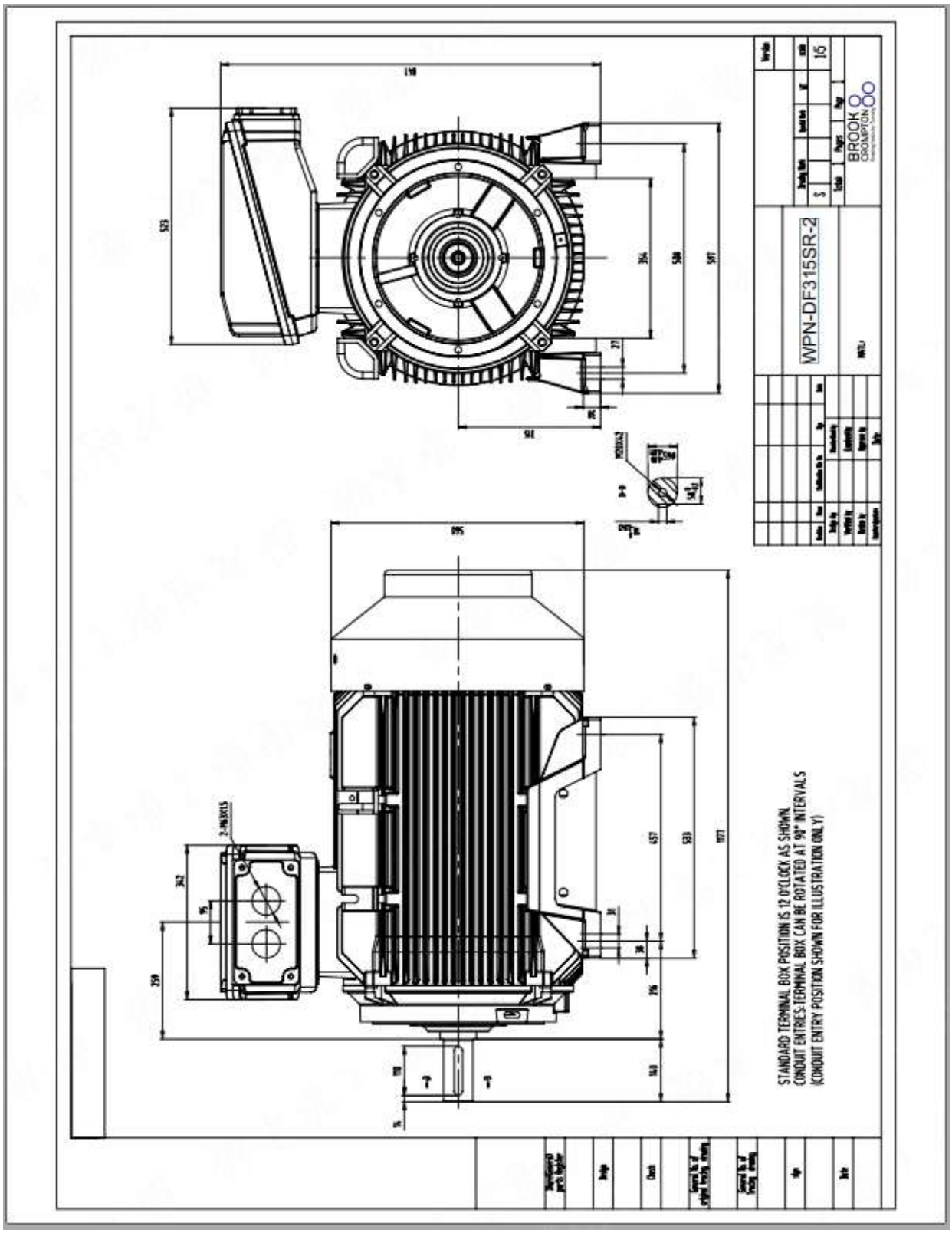
WPN-DF315SR-2
STANDARD TERMINAL BOX POSITION IS 12 O'CLOCK AS SHOWN.
CONDUIT ENTRIES:TERMINAL BOX CAN BE ROTATED AT 90° INTERVALS
(CONDUIT ENTRY POSITION SHOWN FOR ILLUSTRATION ONLY)
BROOK
CROMPTON