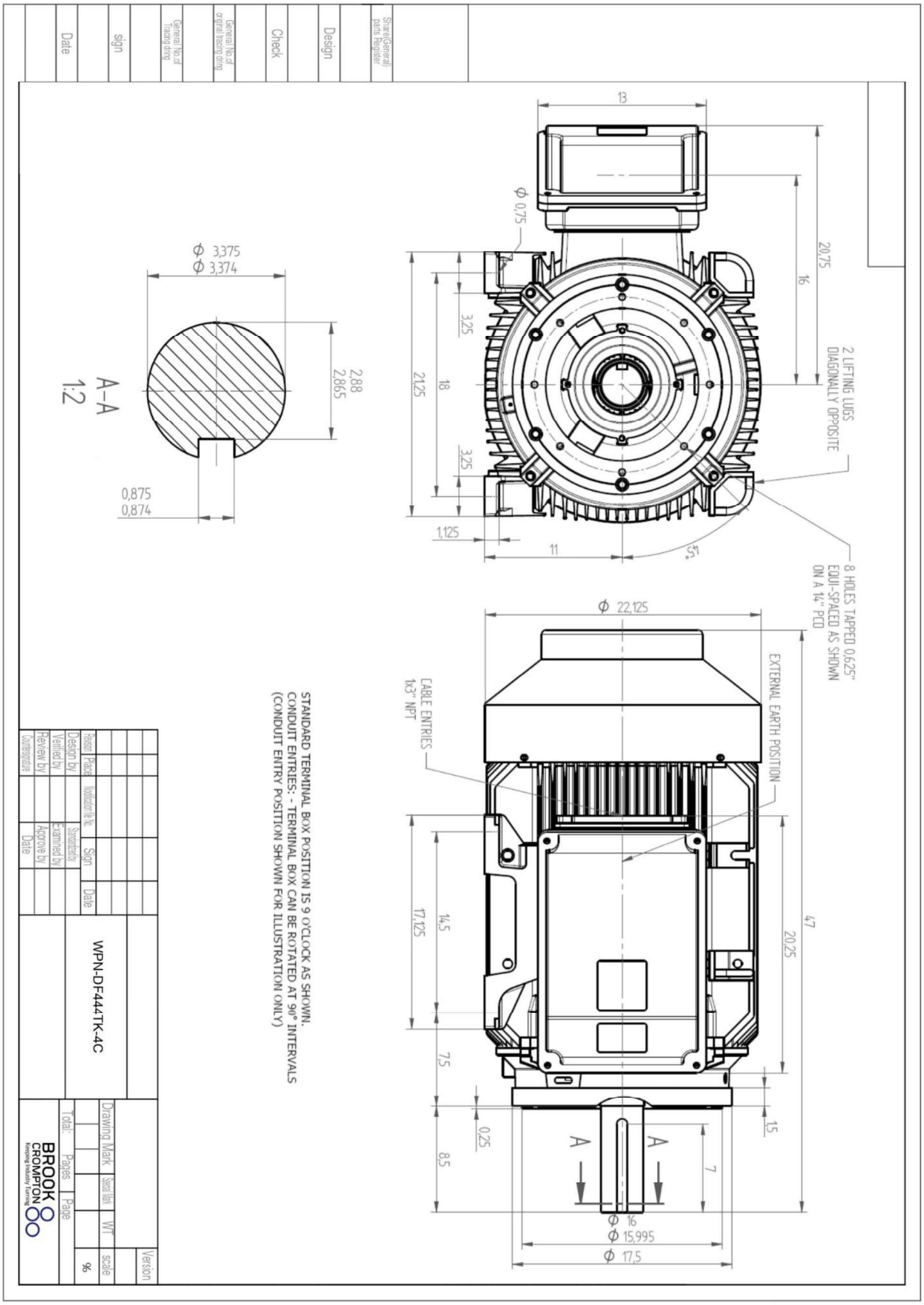
13
20,75
16
Φ 0,75
2 LIFTING LUGS
DIAGONALLY OPPOSITE
3,25
21,25
18
3,25
1,125
11
45°
8 HOLES TAPPED 0,625"
EQUI-SPACED AS SHOWN
ON A 14" PCD
Φ 3,375
Φ 3,374
2,88
2,865
A–A
1:2
0,875
0,874
Φ 22,125
EXTERNAL EARTH POSITION
CABLE ENTRIES
1x3" NPT
47
20,25
17,125
14,5
7,5
0,25
8,5
1,5
7
A
A
Φ 16
Φ 15,995
Φ 17,5
STANDARD TERMINAL BOX POSITION IS 9 O'CLOCK AS SHOWN.
CONDUIT ENTRIES: - TERMINAL BOX CAN BE ROTATED AT 90° INTERVALS
(CONDUIT ENTRY POSITION SHOWN FOR ILLUSTRATION ONLY)
WPN-DF444-TK-4C
BROOK CROMPTON
Keeping Industry Turning