105907GE

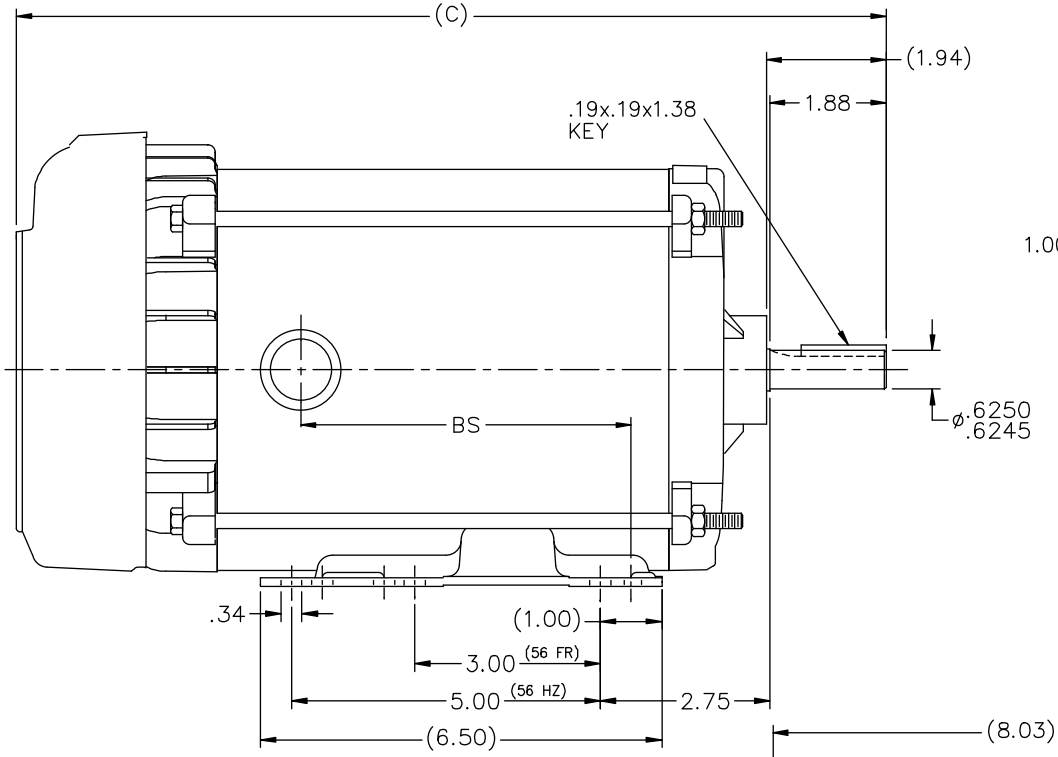

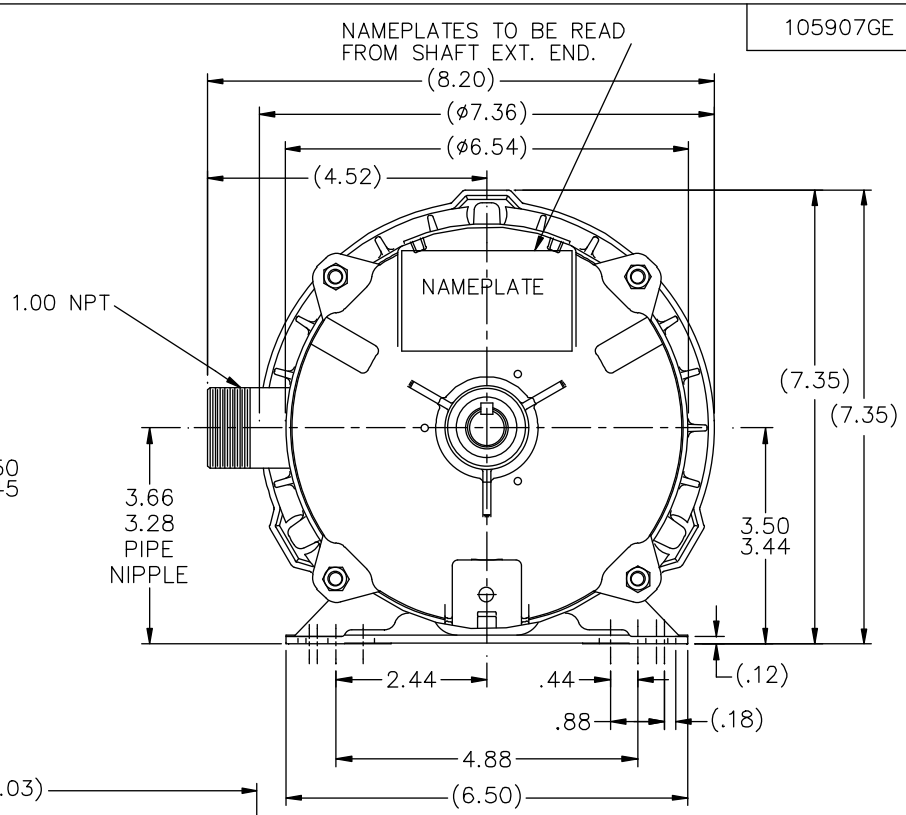

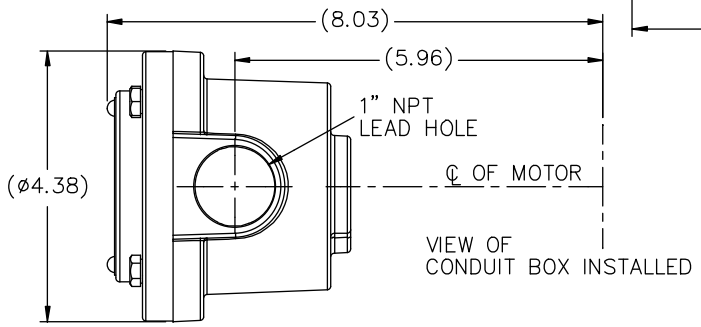

DASH	(C)	BS			
681	13.58	4.65			
731	14.08	5.15	SHOWN		
781	14.58	5.65			
831	15.08	6.15			
881	15.58	6.65			
931	16.08	7.15			
981	16.58	7.65			

NO.	REVISION	BY & DATE	CHK
8	COND. BOX INSTALLED VIEW UPDATED PER ECR-0044571	UD 10/16/13	ST
7	REVISED BASE & BRACKET 08-1256	RJW 03-25-2008	ML
6	REVISED C'BOX PER CN40784A	JJB 02-26-2007	ML
5	CHANGED LOGO TO REGAL BELOIT	TAT 09-07-2005	ML
4	UPDATED DE BRKT., REMOVED -631 CN46098	MJK 06-07-2005	
3	SHORTEN OAL BY .28" CN32968	MJK 01-31-2005	

TOLERANCES UNLESS SPECIFIED

DEC.	INCHES
.X	±.1
.XX	±.03
.XXX	±.005
.XXXX	±.0005
ANG	±7'30"

REGAL BELOIT — REGAL-BELOIT CORPORATION

TITLE OUTLINE
56H FR. – EXP. PR. – TEFC – 1ø & 3ø

MAT'L.
FINISH

DRAWN MKLEIST 11-30-04
CHK ML 01-12-05
APPD DRN 01-13-05
SCALE 1=2
REF
FMF
PREV

THIS DRAWING IN DESIGN AND DETAIL IS OUR PROPERTY AND MUST NOT BE USED EXCEPT IN CONNECTION WITH OUR WORK ALL RIGHTS OF DESIGN AND INVENTION ARE RESERVED
THIS IS AN ELECTRONICALLY GENERATED DOCUMENT – DO NOT SCALE THIS PRINT

RFP
DIST WP
CAD FILE 105907ge

SIZE	DRAWING NO.	PAGE OF	REV.
B	105907GE		8

10/16/2013 1:00:11 AM - Converted by Connexus