XH2F1SC1

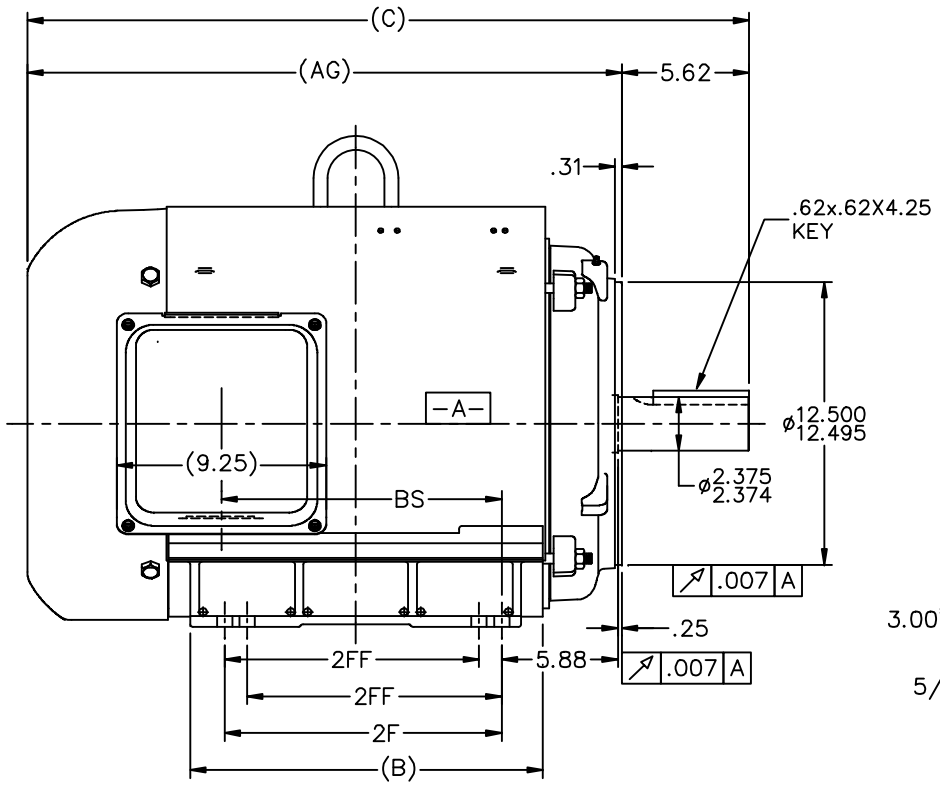

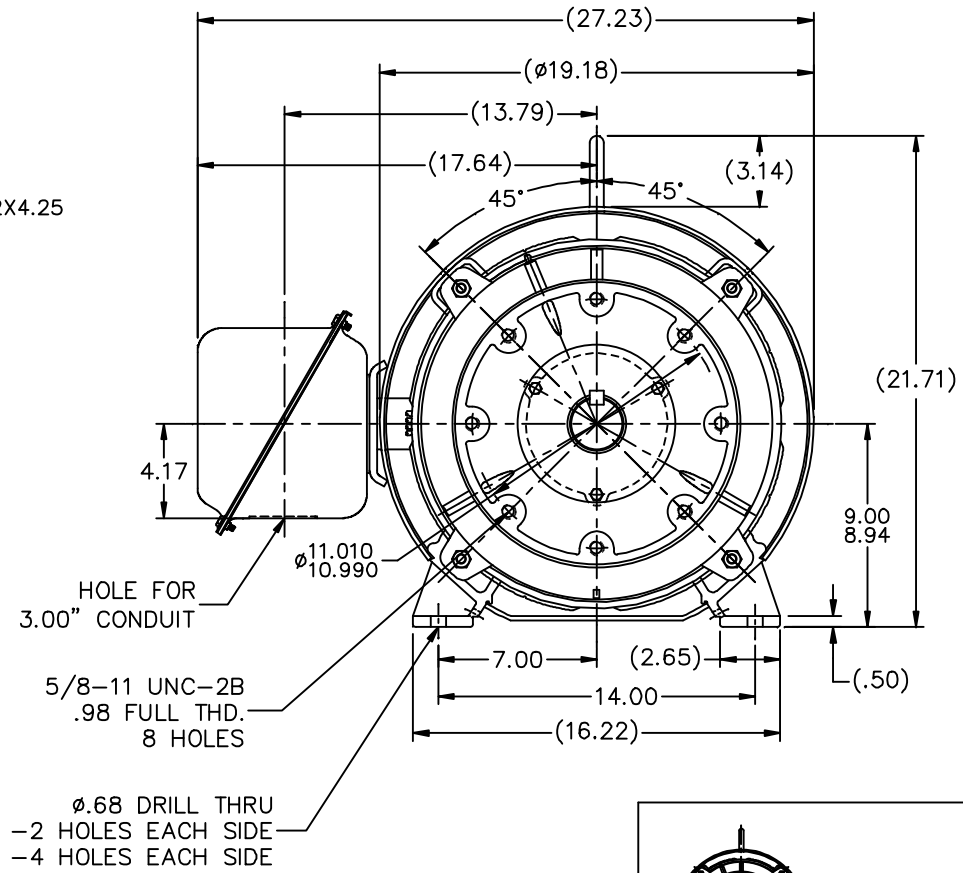

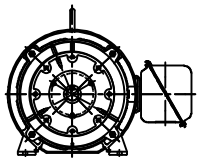

F2 VIEW

1670	364T	31.89	26.27	14.61	11.25	--	--	11.56
1770	365T	32.89	27.27	15.61	12.25	11.25		12.56
DASH	FRAME	C	AG	B	2F	2FF		BS

NO.	REVISION	BY & DATE	CHK
2	UPDATED PER ISAAC# 12-1833	REP 04-25-2012	TB
1	NEW DRAWING CN35344-12	HLB 10-17-2002	HNH

TOLERANCES UNLESS SPECIFIED

DEC.	INCHES
.X	±.1
.XX	±.03
.XXX	±.005
.XXXX	±.0005
ANG	±7'30"

Lincoln MOTORS

TITLE OUTLINE - NEMA MOTORS
360T FR. -TEFC -C' FACE -U.E. -1

MAT'L.

FINISH

CAD FILE xh2f1sc1

RFP 10-17-2002

DIST BY

DRAWN HLB 10-17-2002
CHK ML 10-17-2002
APPD HNH 10-17-2002
SCALE 1=6
REF
FMF
PREV

SIZE B | DRAWING NO. XH2F1SC1 | PAGE 1 OF 1 | REV. 2